Architecture et logiciel libre

Yorik van Havre

Toulouse, 2015

Yorik van Havre

- Architecte, et un des développeurs de FreeCAD
- http://yorik.uncreated.net
- yorik@uncreated.net
- @yorikvanhavre

http://www.uncreated.net

Logiciels:

- Linux
- Blender
- FreeCAD
- IFC++
- QCad, LibreCAD (et DraftSight)
- Inkscape
- Gimp
- LibreOffice

Le problème:

- 2 joueurs: Autodesk et Nemetschek
- Revit, ArchiCAD, AllPlan, Bentley: 5000 € / license
- Forte politique d' “esclavagisme”
- Beaucoup est dicté par le logiciel

Google revit architecture

Yorik

Web | Images | Videos | Books | News | More | Search tools | SafeSearch

Size | Color | Type | Time | Usage rights | Show sizes | Clear

533 × 400

254 × 198

1040 × 640

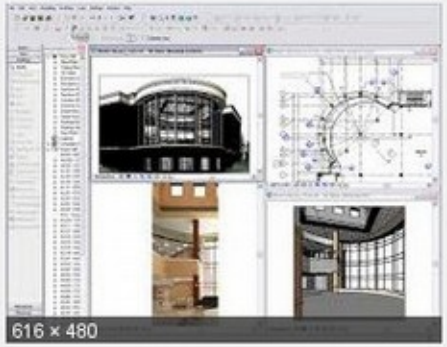
616 × 480

1024 × 768

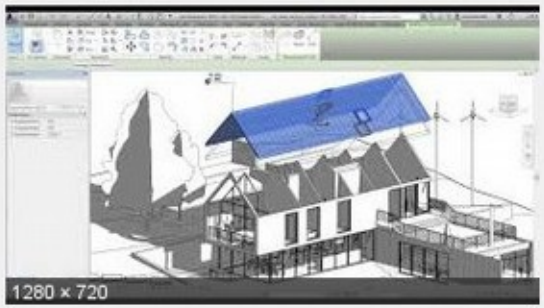
1280 × 720

1040 × 706 - caddmicrosystems.com

470 × 384

600 × 312

364 × 280

1600 × 996

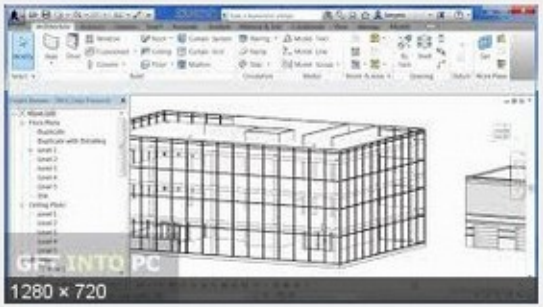

1280 × 720

375 × 204

Pourquoi on y reste:

- Confort d'utilisation
- On reste avec ce qu'on a appris
- Mécanismes de monopole (formats de fichier, etc)
- Syndrome de Stockholm?

Entre les deux:

Plusieurs solutions intermédiaires, moins confortables, moins chères:

- Versions “light” (WTF!)
- Rhino + plugins
- BIM alternatifs (Vectorworks, IDEA, Spirit, etc…)
- Sketchup

L'état du libre:

- Comparé à Revit ou ArchiCAD:

très loin

- Comparé aux solutions “alternatives¨:

très proche

Les avantages du libre:

- Le prix
- Formats ouverts
- Liberté de monter ses propres méthodes de travail
- Développé pour la performance, pas pour la vente

Les problèmes du libre:

- Les ressources sont limitées → priorités
- Le confort de l'utilisateur a une priorité moins grande
- Moins d'utilisateurs → moins facile à apprendre

Le BIM:

- La “version Autodesk/Nemetschek”: Seuls les produits Autodesk/ Nemetschek font du BIM
- Du côté des “alternatifs”: Le BIM évolue de la CAO traditionnelle
- La définition IFC

Essayons une définition:

- Modèle 3D d'un bâtiment
- Organisé et analysable: quantités, coupes, listes, simulations, etc...
- Couches d'informations supplémentaires (“4D”, “5D”, etc)
- Échangeable (IFC)

Le BIM libre:

- Blender: Conception, rendu, analyse rapide
- FreeCAD: Développement BIM, production de plans, coupes, analyse détaillée, quantités
- IFC++ : Vérification du modèle IFC

Accessoires:

- LibreOffice: tableaux, bureau, etc
- Gimp et Inkscape: présentation et images
- Draftsight¸QCad, LibreCAD: finition CAO 2D
- Utilitaires de conversion

Blender:

- Modélisation 3D simple et rapide (maillages)
- Toutes sortes d'outils de visualisation venus du game engine
- Moteur de rendu réaliste (cycles)

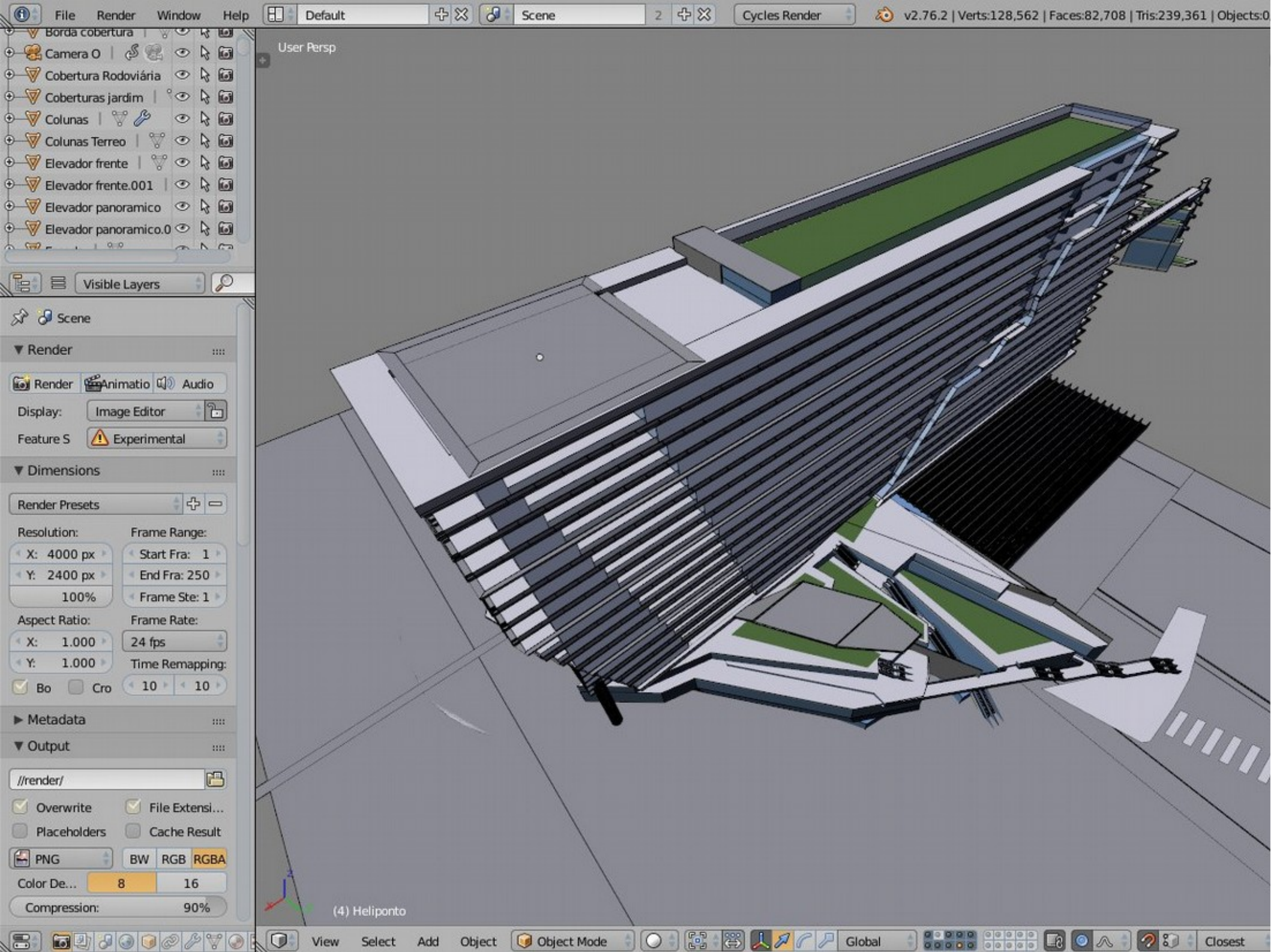
File
Render
Window
Help
Default
Scene
Cycles Render
v2.76.2 | Verts:128,562 | Faces:82,708 | Tris:239,361 | Objects:0
Borda cobertura
Camera O
Cobertura Rodoviária
Coberturas jardim
Colunas
Colunas Terreo
Elevador frente
Elevador frente.001
Elevador panoramico
Elevador panoramico.0
Visible Layers
Scene
Render
Render
Animatio
Audio
Display:
Image Editor
Feature S
Experimental
Dimensions
Render Presets
Resolution:
X: 4000 px
Y: 2400 px
100%
Frame Range:
Start Fra: 1
End Fra: 250
Frame Ste: 1
Aspect Ratio:
X: 1.000
Y: 1.000
Frame Rate:
24 fps
Time Remapping:
10
10
Bo
Cro
Metadata
Output
//render/
Overwrite
File Extensi...
Placeholders
Cache Result
PNG
BW
RGB
RGBA
Color De...
8
16
Compression:
90%
User Persp
(4) Heliponto
View
Select
Add
Object
Object Mode
Global
Closest

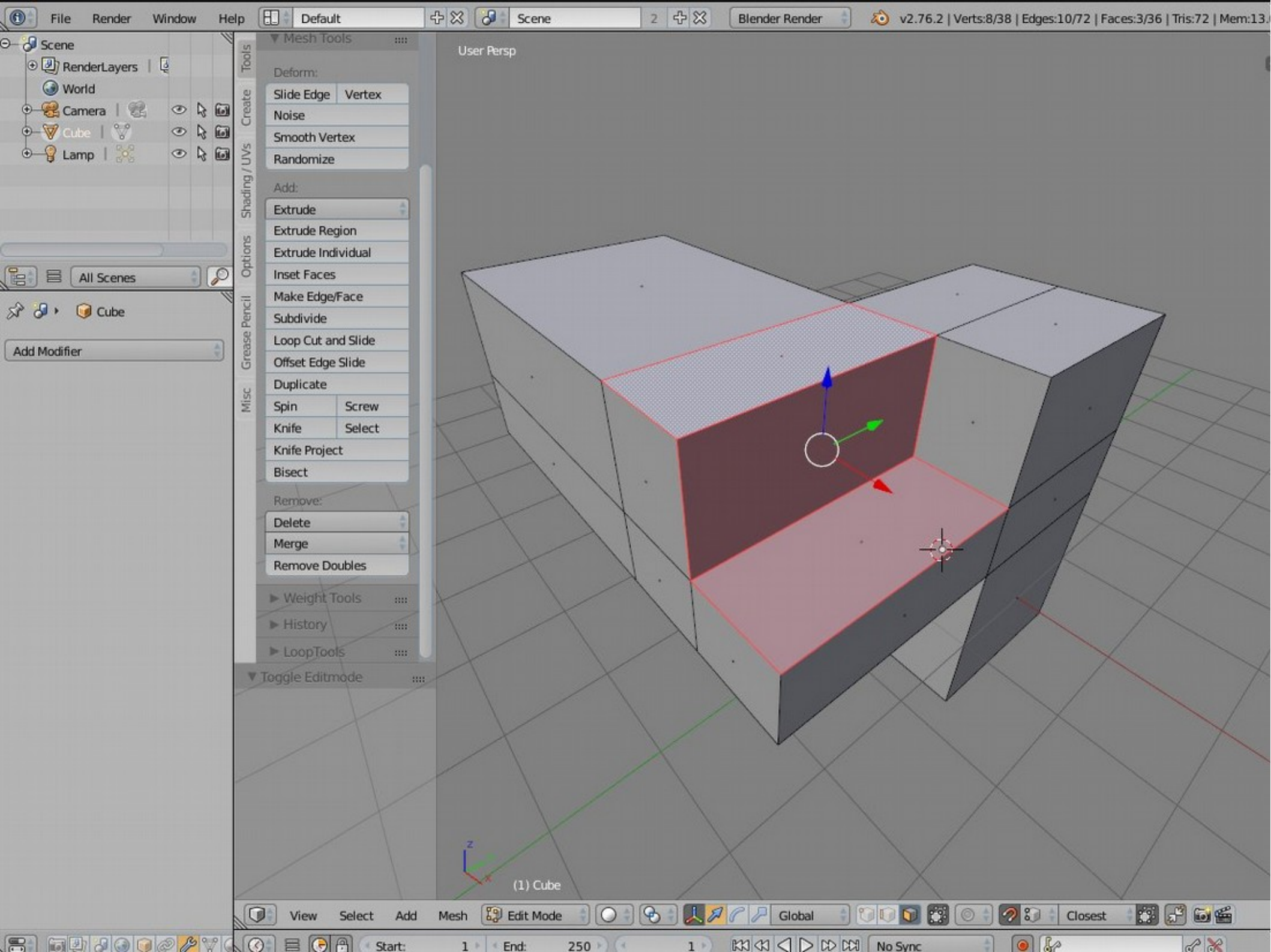
File
Render
Window
Help
Default
Scene
Blender Render
v2.76.2 | Verts:8/38 | Edges:10/72 | Faces:3/36 | Tris:72 | Mem:13.
Scene
RenderLayers
World
Camera
Cube
Lamp
All Scenes
Cube
Add Modifier
Tools
Create
Shading / UVs
Options
Grease Pencil
Misc
Mesh Tools
Deform:
Slide Edge
Vertex
Noise
Smooth Vertex
Randomize
Add:
Extrude
Extrude Region
Extrude Individual
Inset Faces
Make Edge/Face
Subdivide
Loop Cut and Slide
Offset Edge Slide
Duplicate
Spin
Screw
Knife
Select
Knife Project
Bisect
Remove:
Delete
Merge
Remove Doubles
Weight Tools
History
LoopTools
Toggle Editmode
User Persp
(1) Cube
View
Select
Add
Mesh
Edit Mode
Global
Closest
Start:
1
End:
250
No Sync

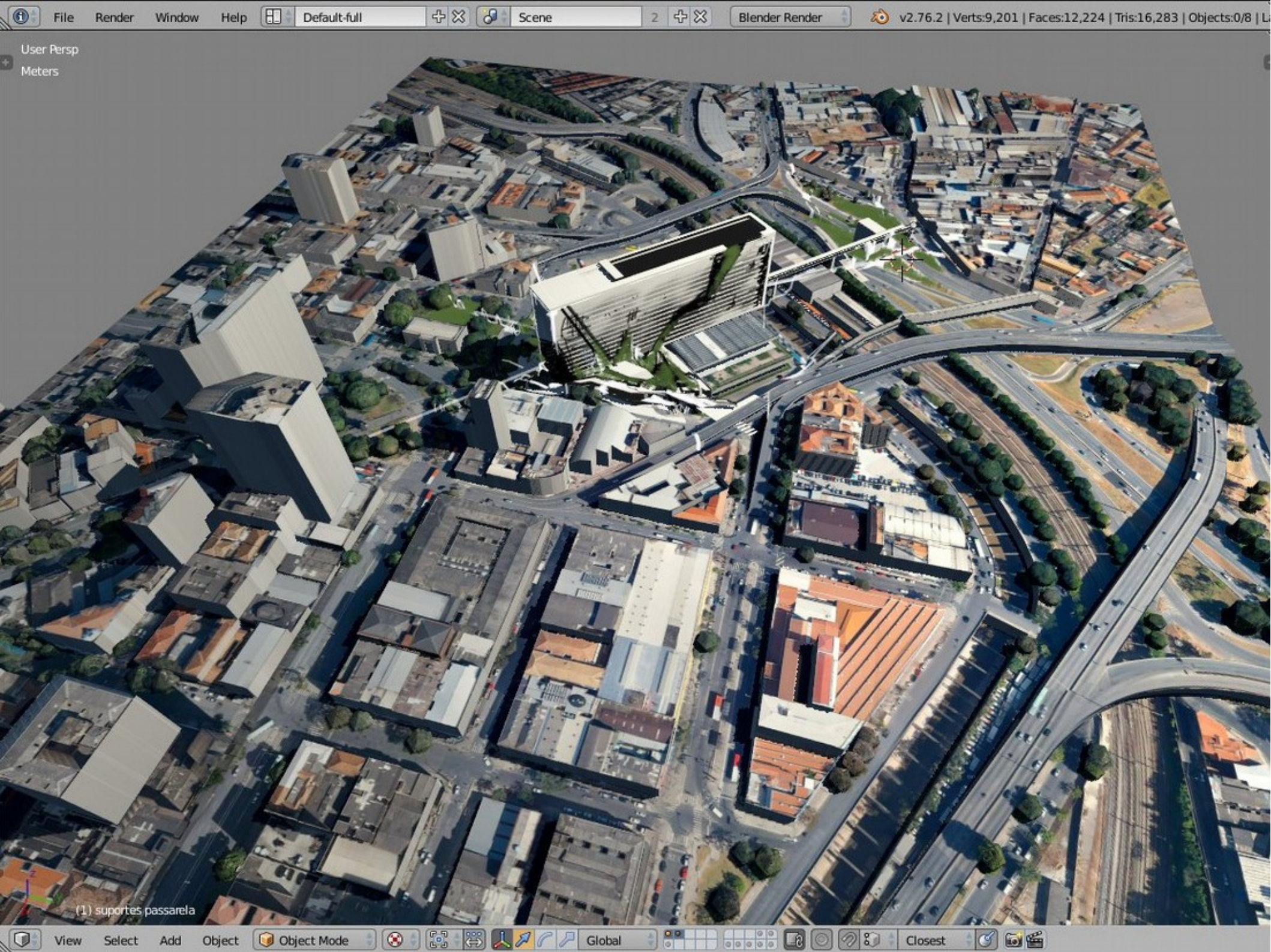
File
Render
Window
Help
Default-full
Scene
2
Blender Render
v2.76.2 | Verts:9,201 | Faces:12,224 | Tris:16,283 | Objects:0/8 | La
User Persp
Meters
(1) suportes passarela
View
Select
Add
Object
Object Mode
Global
Closest

File
Render
Window
Help
Default-full
Scene
2
Blender Render
v2.76.2 | Verts:9,201 | Faces:12,224 | Tris:16,283 | Objects:0/8 | L
User Persp
Meters
(1) suportes passarela
View
Select
Add
Object
Object Mode
Global
Closest

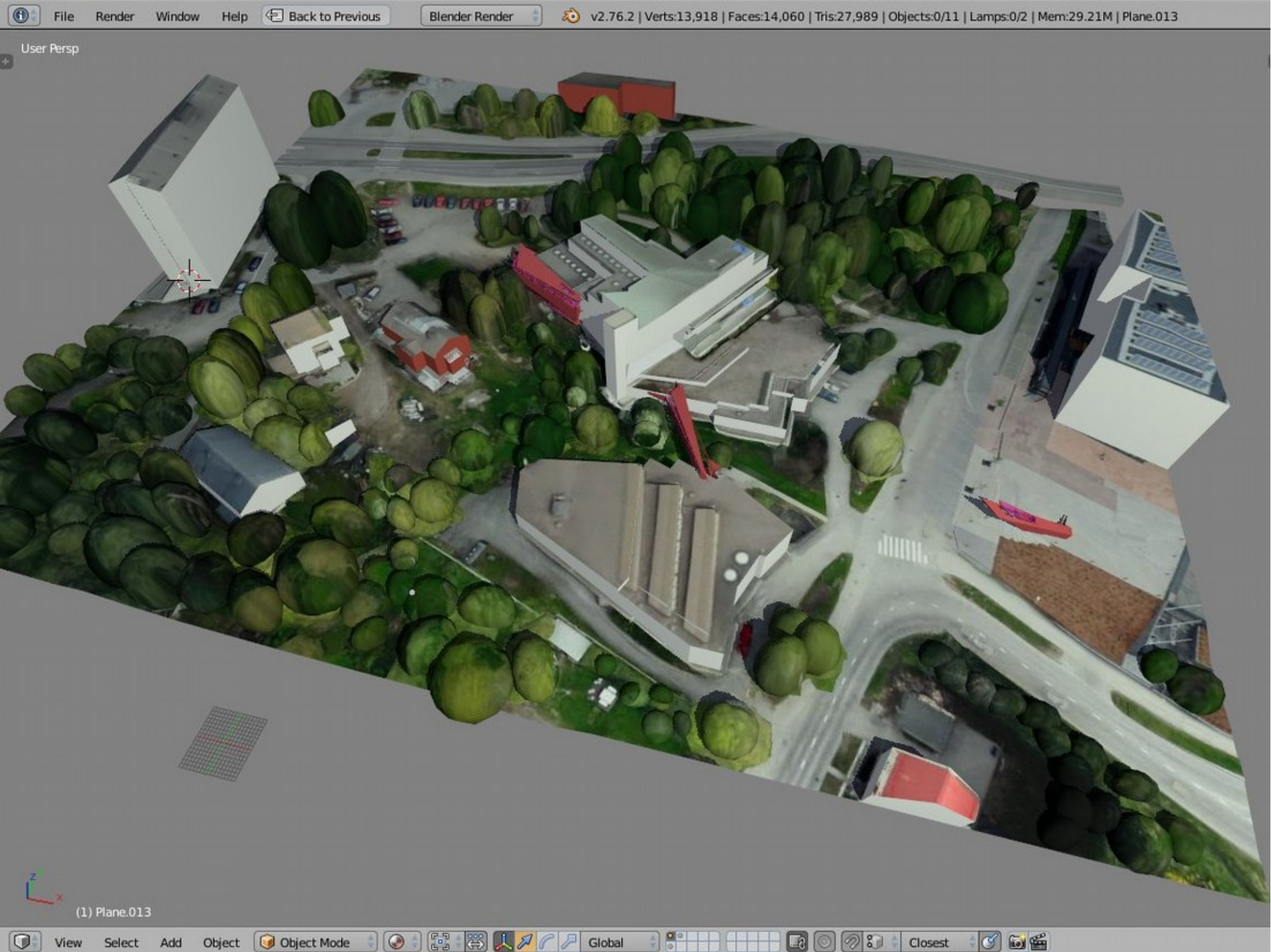
File
Render
Window
Help
Back to Previous
Blender Render
v2.76.2 | Verts:13,918 | Faces:14,060 | Tris:27,989 | Objects:0/11 | Lamps:0/2 | Mem:29.21M | Plane.013
User Persp
(1) Plane.013
View
Select
Add
Object
Object Mode
Global
Closest

File
Render
Window
Help
Default
Morte ao Aalto!
Blender Render
v2.76.2 | Verts:4/937 | Edges:4/2,221 | Faces:1/1,293 | Tris:2,556
2D terreno.004
Hemi.001
Icosphere.001
Plane.010
Plane.012
Plane.013
Plane.014
Plane.015
Plane.016
Spot.001
Visible Layers
Plane.016
Plane.016
Transform
Location:
Rotation:
Scale:
109.1
55.07
93.92
-0.839
0.006°
25.23
:0.814
:0.908
:1.195
Rotation ...
XYZ Euler
Delta Transform
Transform Locks
Relations
Layers:
Parent:
Object
Pass Index: 0
Groups
Add to Group
Display
Name
Bou
Box
Axis
Texture Space
Wire
X-Ray
Draw All Edges
Transparency
Maximum Draw T
Object Color:
User Persp
(1) Plane.016
View
Select
Add
Mesh
Edit Mode
Global
Closest
Start: 1
End: 250
1
No Sync

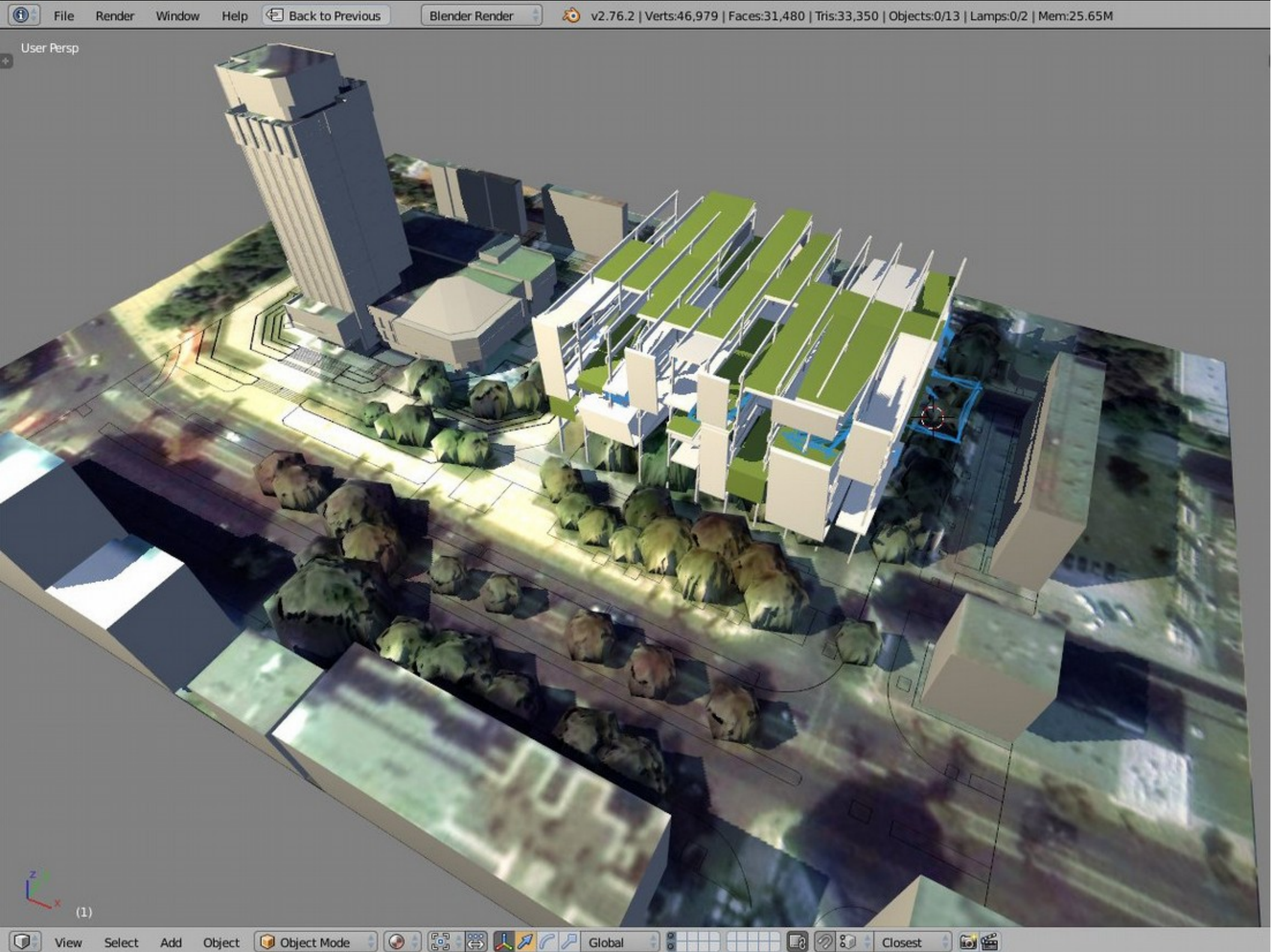
File
Render
Window
Help
Back to Previous
Blender Render
v2.76.2 | Verts:46,979 | Faces:31,480 | Tris:33,350 | Objects:0/13 | Lamps:0/2 | Mem:25.65M
User Persp
(1)
View
Select
Add
Object
Object Mode
Global
Closest

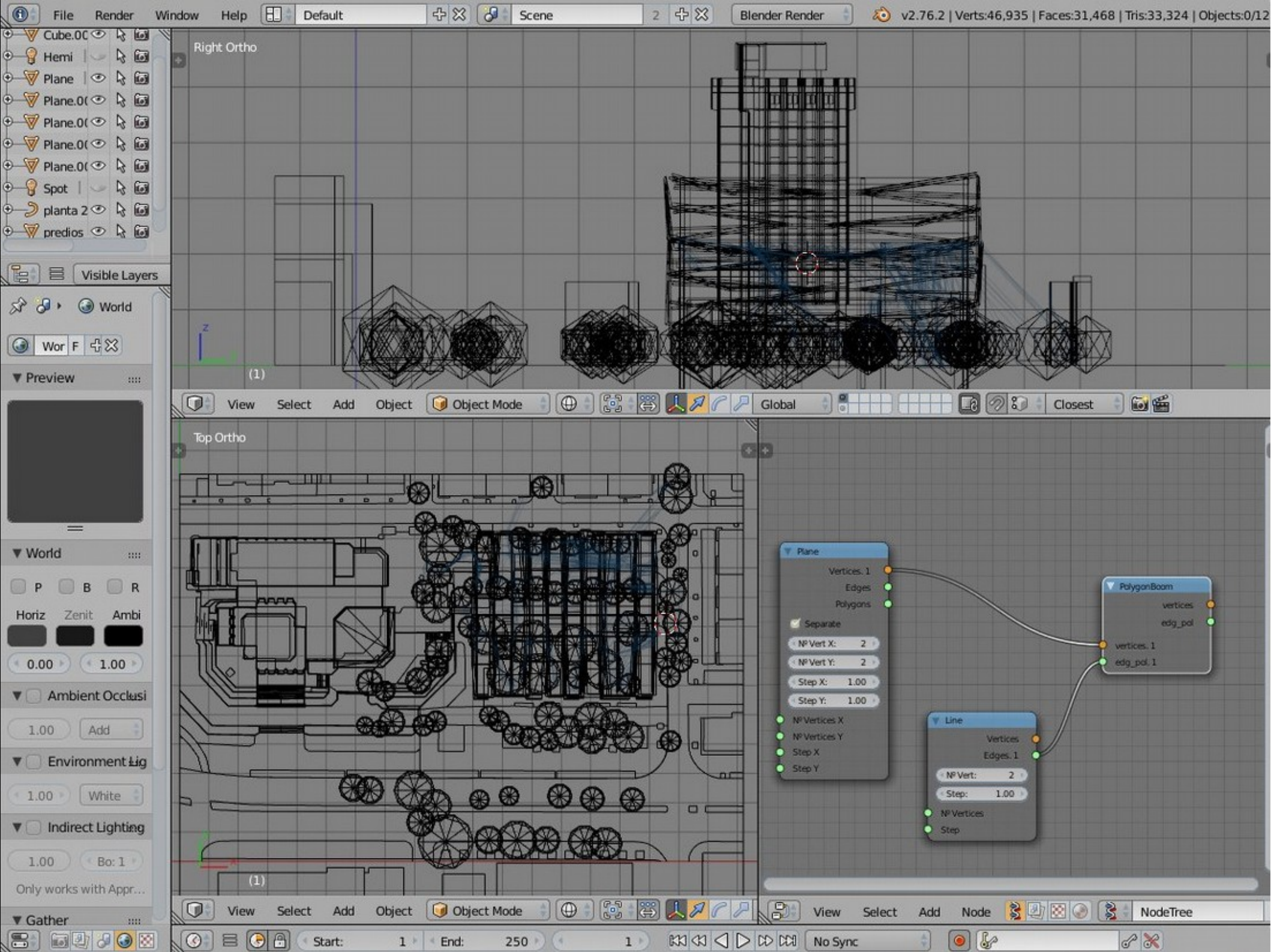
File
Render
Window
Help
Default
Scene
Blender Render
v2.76.2 | Verts:46,935 | Faces:31,468 | Tris:33,324 | Objects:0/12
Cube.0(
Hemi
Plane
Plane.0(
Plane.0(
Plane.0(
Plane.0(
Spot
planta 2
predios
Visible Layers
World
Wor
F
Preview
World
P
B
R
Horiz
Zenit
Ambi
0.00
1.00
Ambient Occlusi
1.00
Add
Environment Lig
1.00
White
Indirect Lighting
1.00
Bo: 1
Only works with Appr...
Gather
Right Ortho
View
Select
Add
Object
Object Mode
Global
Closest
Top Ortho
View
Select
Add
Object
Object Mode
Plane
Vertices. 1
Edges
Polygons
Separate
Nº Vert X: 2
Nº Vert Y: 2
Step X: 1.00
Step Y: 1.00
Nº Vertices X
Nº Vertices Y
Step X
Step Y
PolygonBoom
vertices
edg_pol
vertices. 1
edg_pol. 1
Line
Vertices
Edges. 1
Nº Vert: 2
Step: 1.00
Nº Vertices
Step
View
Select
Add
Node
NodeTree
Start: 1
End: 250
1
No Sync

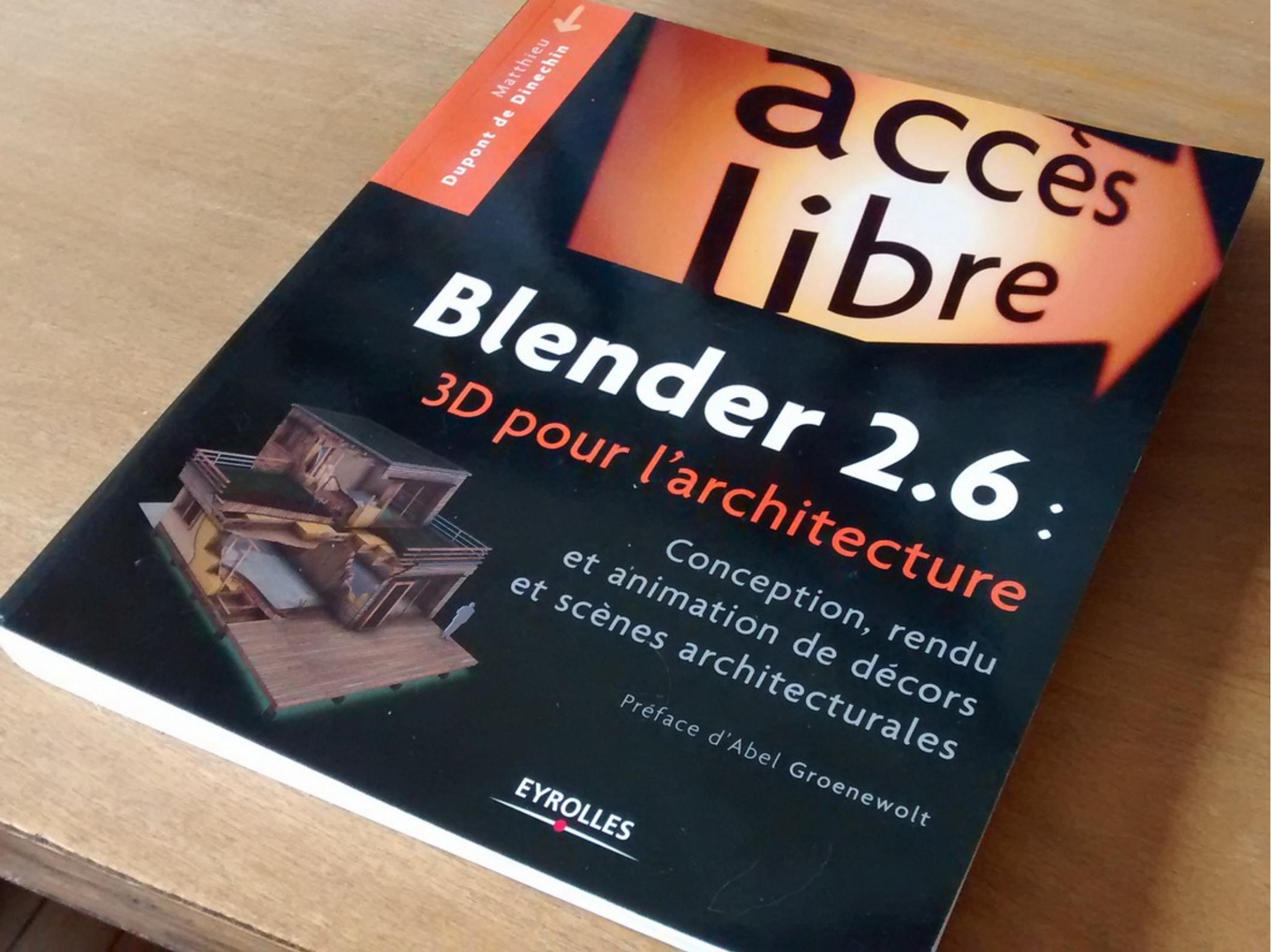
Matthieu
Dupont de Dinechin
accès
libre
Blender 2.6 :
3D pour l'architecture
Conception, rendu
et animation de décors
et scènes architecturales
Préface d'Abel Groenewolt
EYROLLES

FreeCAD:

- Modélisation 3D solide, paramétrique
- Plugins (modules) pour tâches détaillées (architecture, plans 2D, impression 3D, rendu, etc)
- Très facile a étendre et programmer

File Edit View Tools Macro Architecture Draft Windows Help

Arch

Auto 2px 0.20

Combo View

Model Tasks

Labels & Attributes

Application

- testhouse
  - Construction
  - Annotations
    - Plan Annotations
    - Section A Annotations
  - Site
    - Testhouse 2
      - Ground floor
        - Structures
        - Walls
          - Wall Short 1
          - Wall Long 1
          - Wall Short 2

Property	Value

View Data

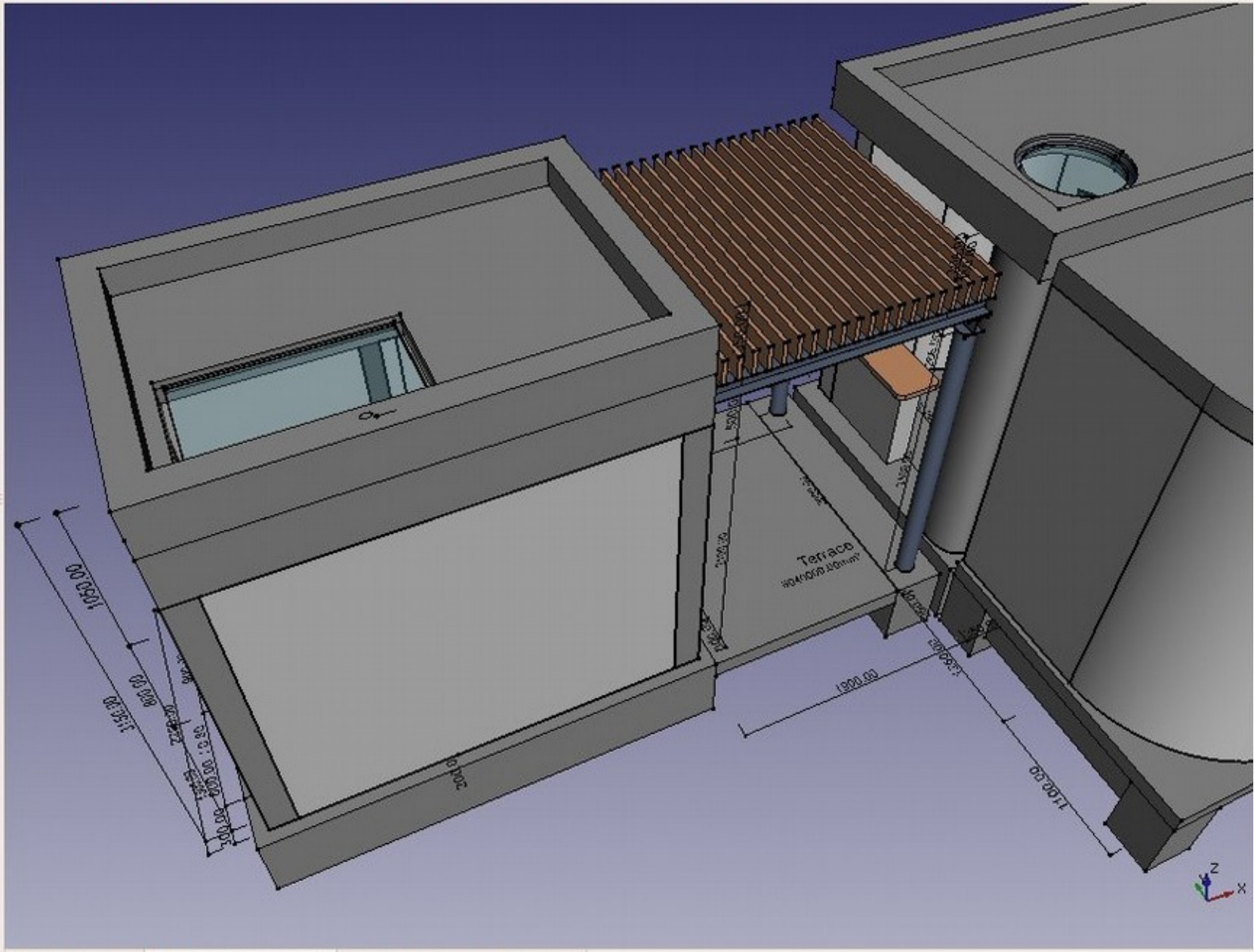

Start page testhouse : 1 testhouse : A3 Page

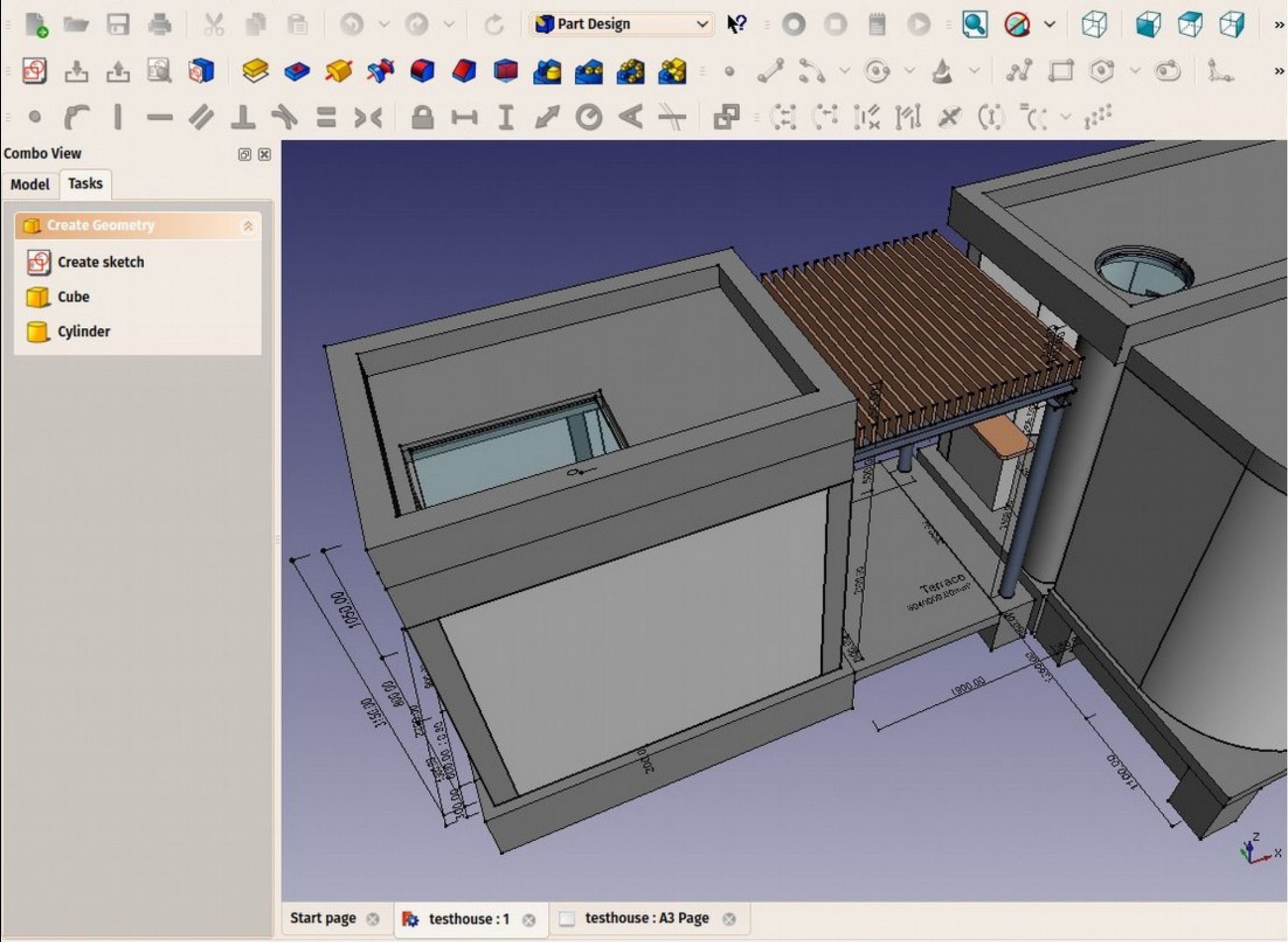
Part Design
Combo View
Model
Tasks
Create Geometry
Create sketch
Cube
Cylinder
Terrace
Start page
testhouse : 1
testhouse : A3 Page
Preselected: testhouse.Structure013.Edge24 (2016.805908,2100.000000,3150.000000)

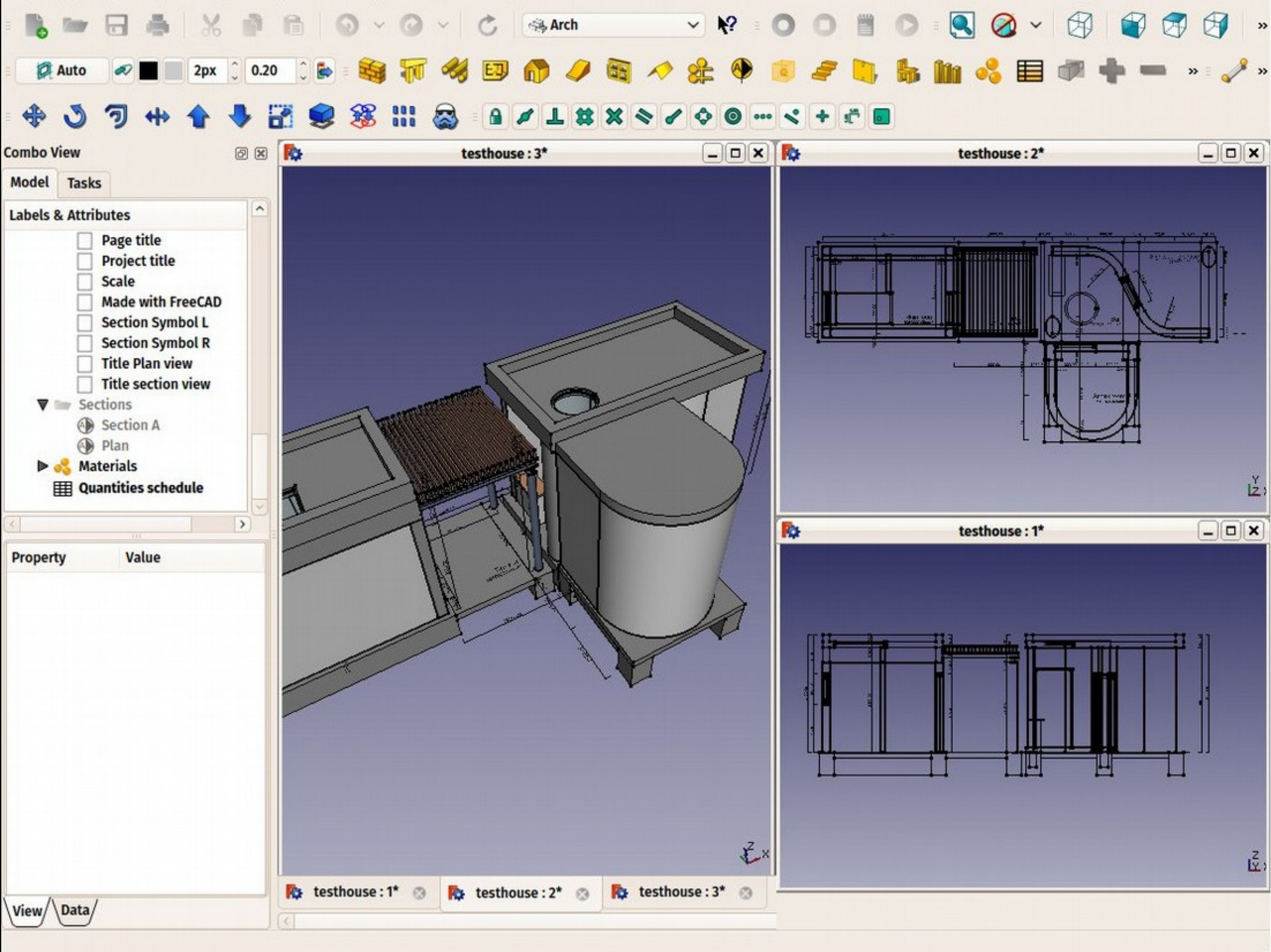
Arch
Auto
2px
0.20
Combo View
Model
Tasks
Labels & Attributes
Page title
Project title
Scale
Made with FreeCAD
Section Symbol L
Section Symbol R
Title Plan view
Title section view
Sections
Section A
Plan
Materials
Quantities schedule
Property
Value
View
Data
testhouse : 3*
testhouse : 2*
testhouse : 1*
testhouse : 1*
testhouse : 2*
testhouse : 3*

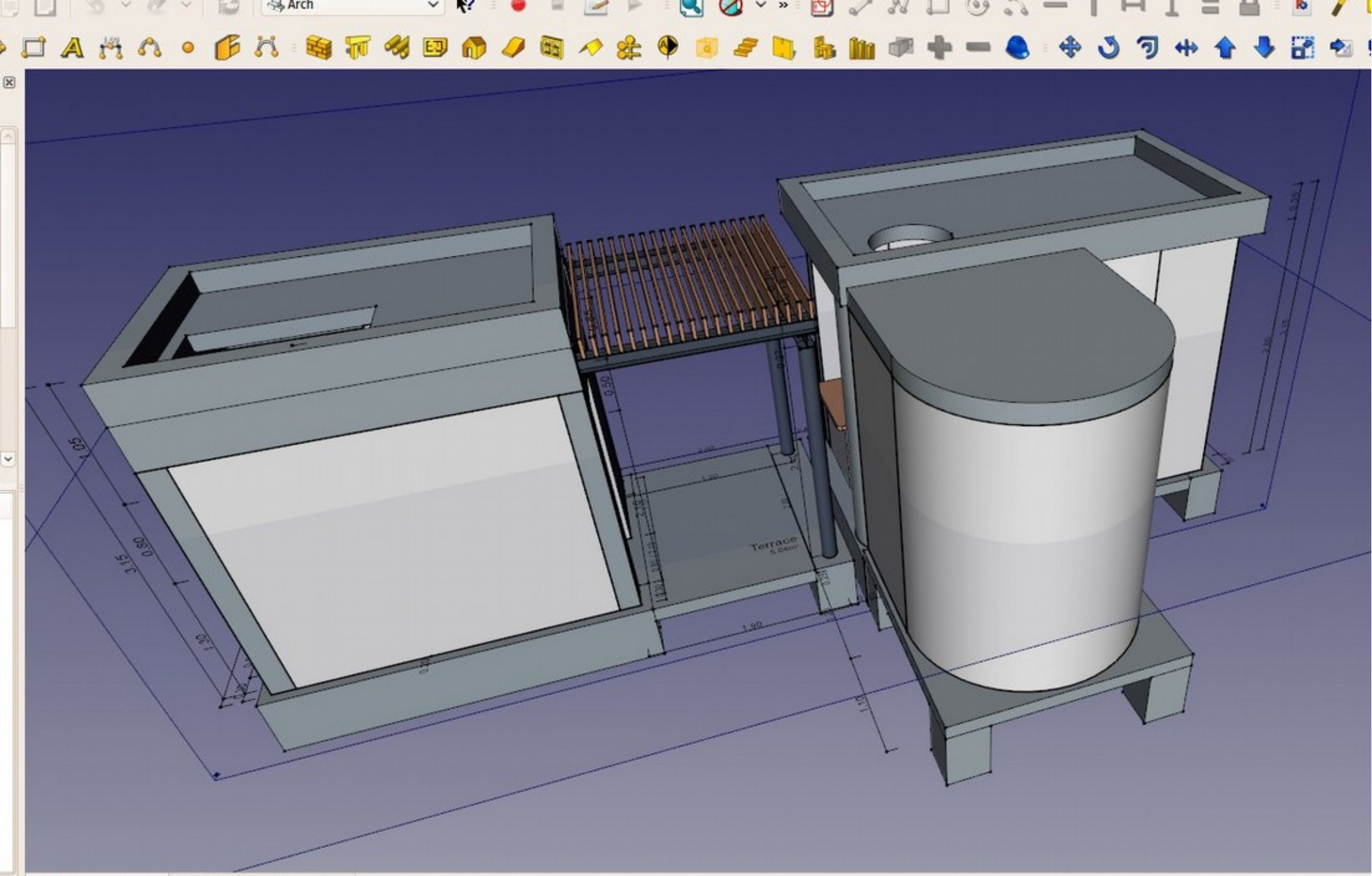

Report view

```
Active document is Unnamed (at 0x47ea180)
Active view is Unnamed : 1[*] (at 0x47ec120)
Sel : Clear selection
No active document
Active view is Unnamed : 1[*] (at 0x638a580)
```

Python console

```
Type 'help', 'copyright', 'credits' or 'license' for more information.
>>> App.setActiveDocument("Unnamed")
>>> App.ActiveDocument=App.getDocument("Unnamed")
>>> Gui.ActiveDocument=Gui.getDocument("Unnamed")
>>> App.closeDocument('Unnamed')
```

File Edit View Tools Macro Architecture Draft Windows Help

Arch

Auto 2px 0.20

Combo View

Model Tasks

Labels & Attributes

- Page title
- Project title
- Scale
- Made with FreeCAD
- Section Symbol L
- Section Symbol R
- Title Plan view
- Title section view
- Sections
  - Section A
  - Plan
- Materials
- Quantities schedule

Property	Value

View Data

Start page | testhouse : 1 | testhouse : A3 Page

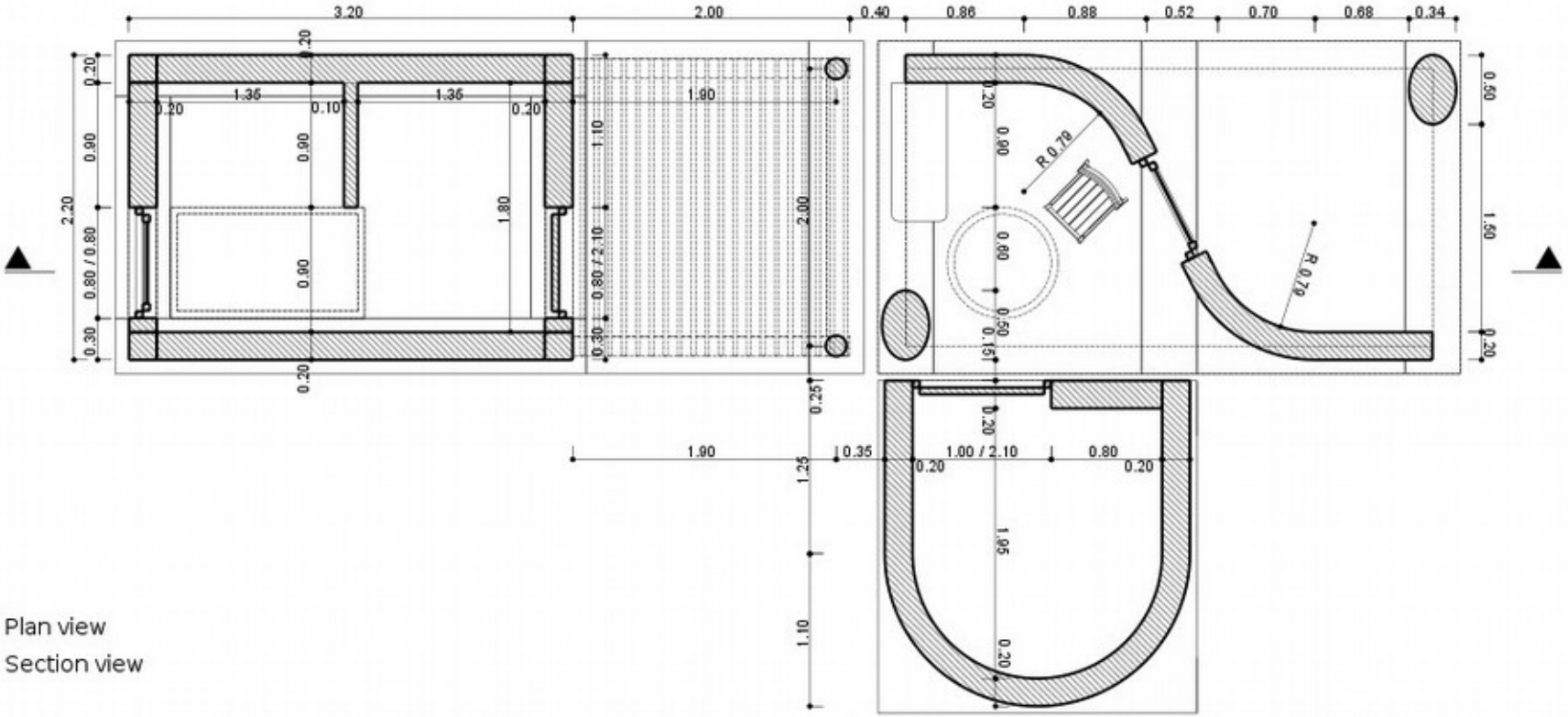

Plan view

Section view

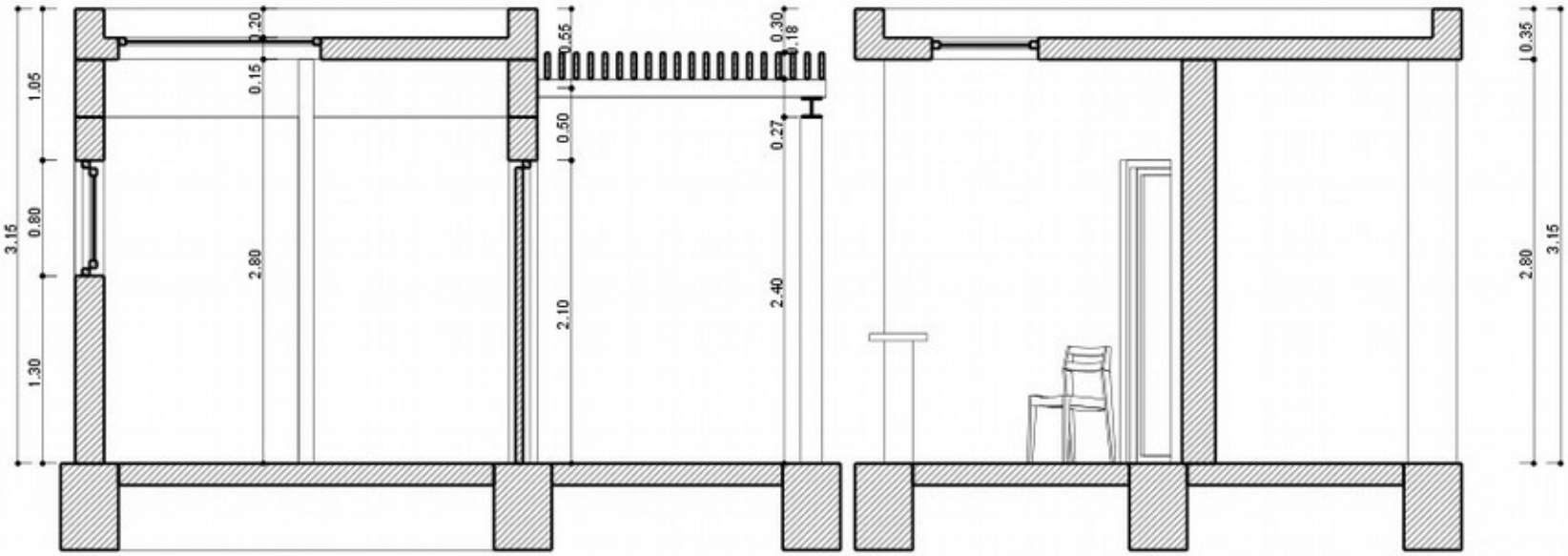

Test House

Plan and Section

Scale: 1:33

Made with FreeCAD

File Edit View Tools Macro Architecture Draft Windows Help

Arch

Auto 2px 0.20

Combo View

Model Tasks

Labels & Attributes

- Page title
- Project title
- Scale
- Made with FreeCAD
- Section Symbol L
- Section Symbol R
- Title Plan view
- Title section view
- Sections
  - Section A
  - Plan
- Materials
- Quantities schedule

Property	Value
Base	
Display Mode	Spreadsheet
Visibility	true

View Data

Contents

	A	B	C	D	E	F	G
1	Quantities schedule						
2	Project: testhouse						
3	Date: Sun A...						
4							
5		Material	Description	Color	Item	Volume (m³)	
6							
7	1. Columns						
8							
9		Steel	Structural steel, prot...		Metal column 1	0.0424115	
10					Metal column 2	0.0424115	
11					Total	0.084823	
12							
13		Concrete	25MPa cast-in-place structural concrete		Column 1	0.096	
14					Column 2	0.096	
15					Column 3	0.096	
16					Column 4	0.096	
17					Column Extension 1	0.37385	
18					Column Extension 2	0.37385	
19					Total	1.1317	

testhouse : 1* testhouse : 2* testhouse : 3* Quantities schedule*

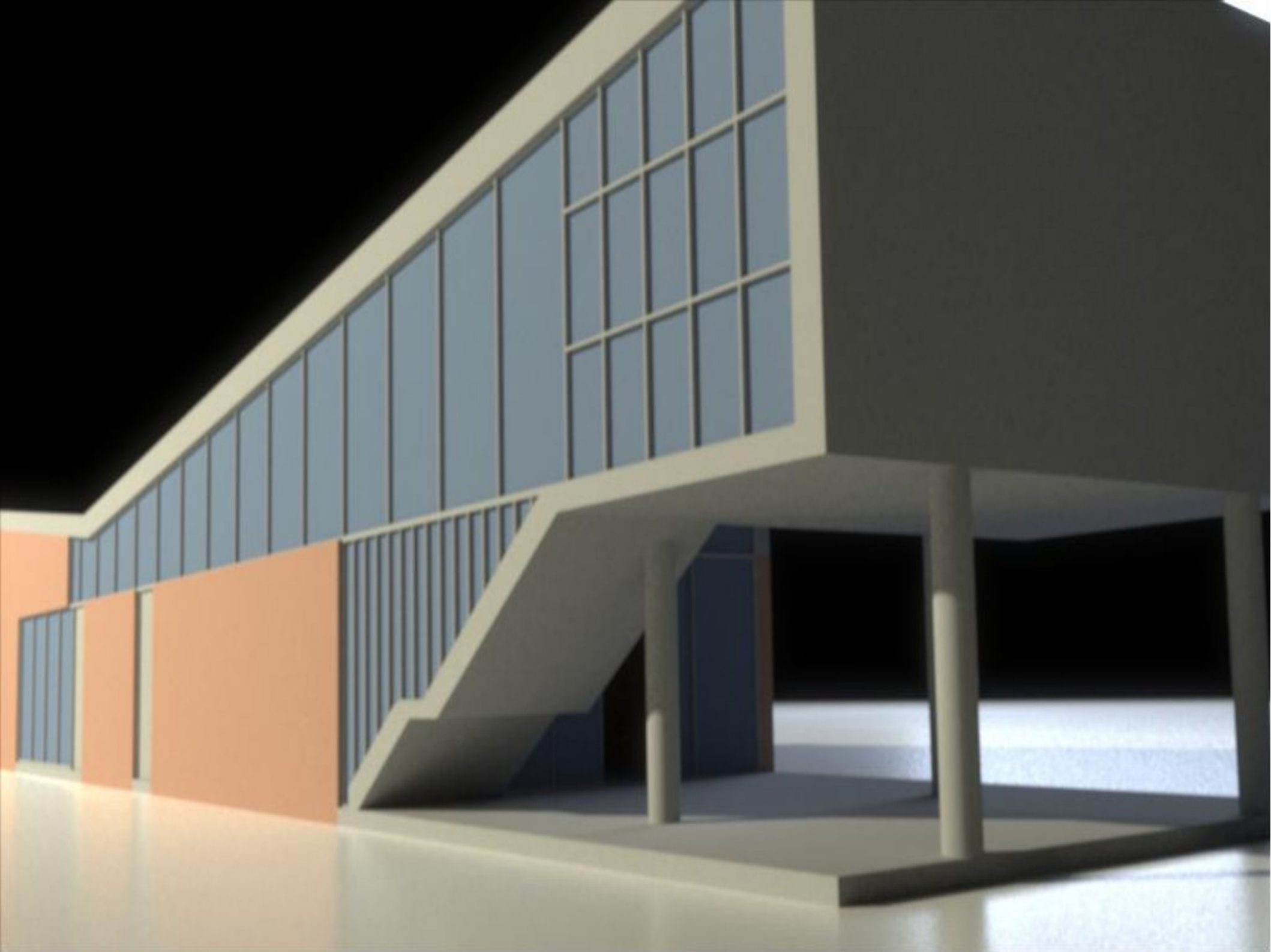

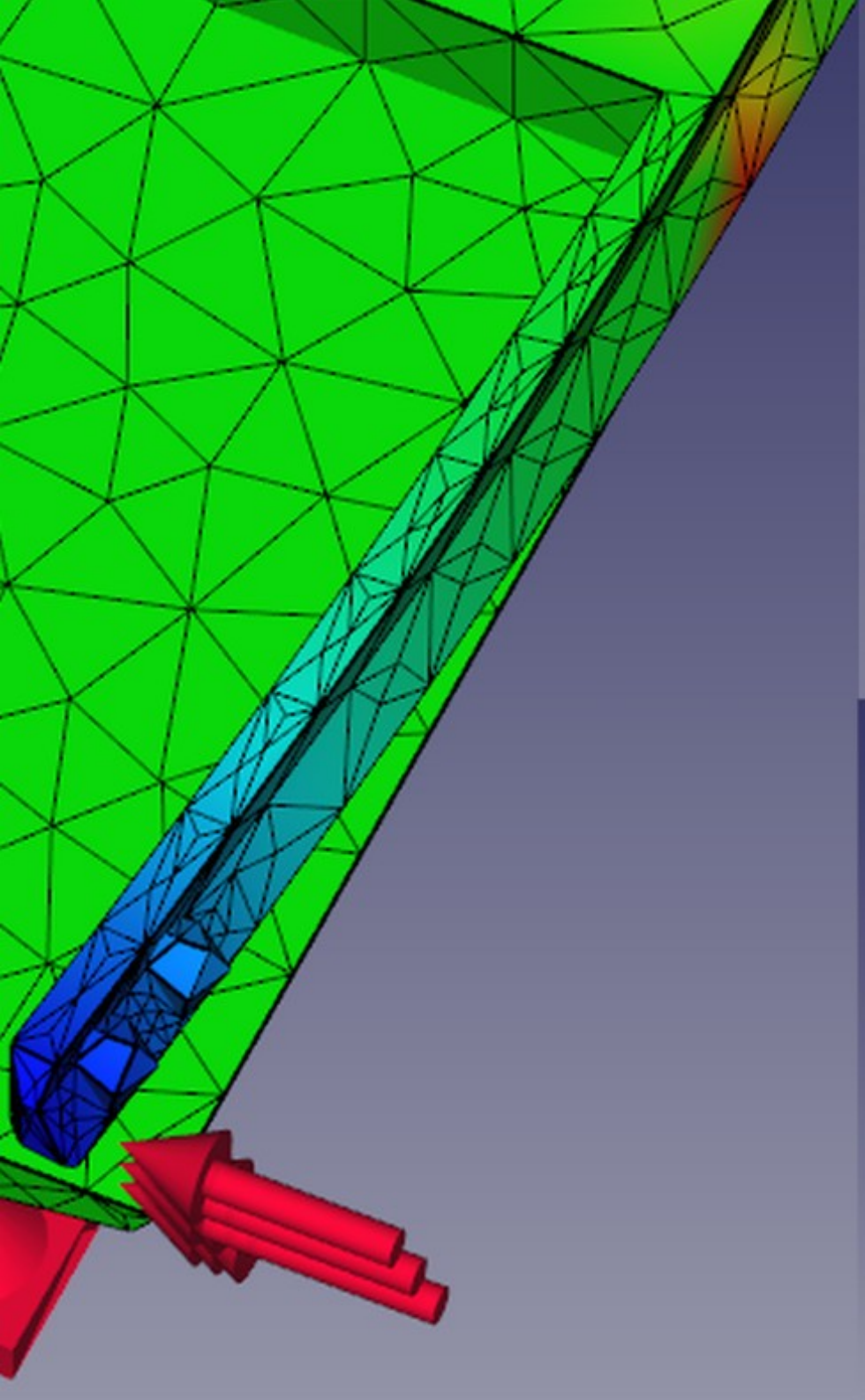

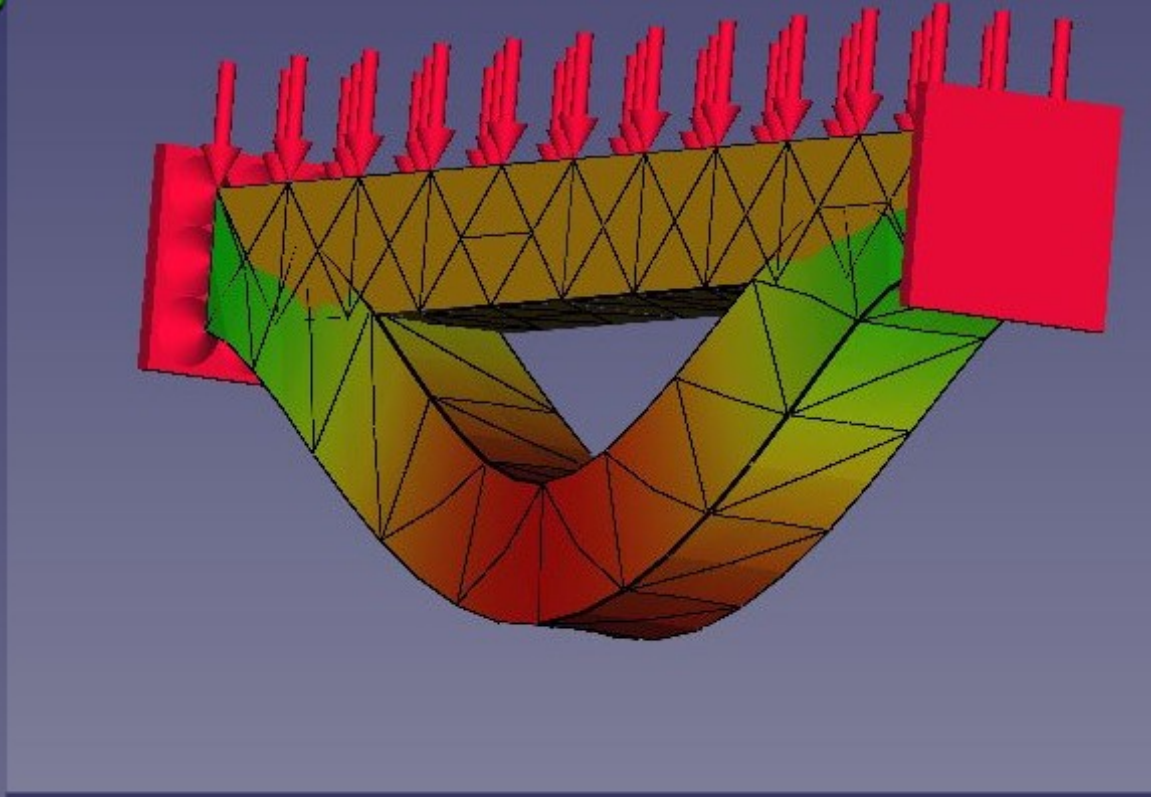

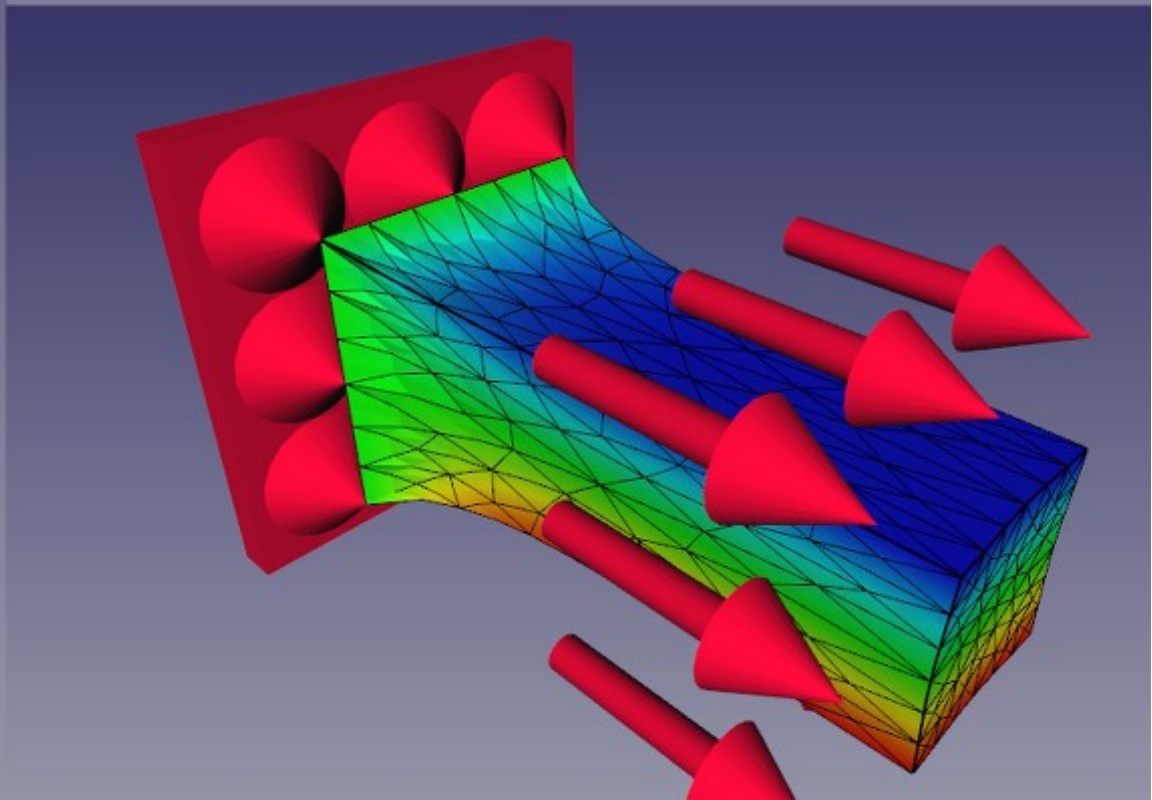

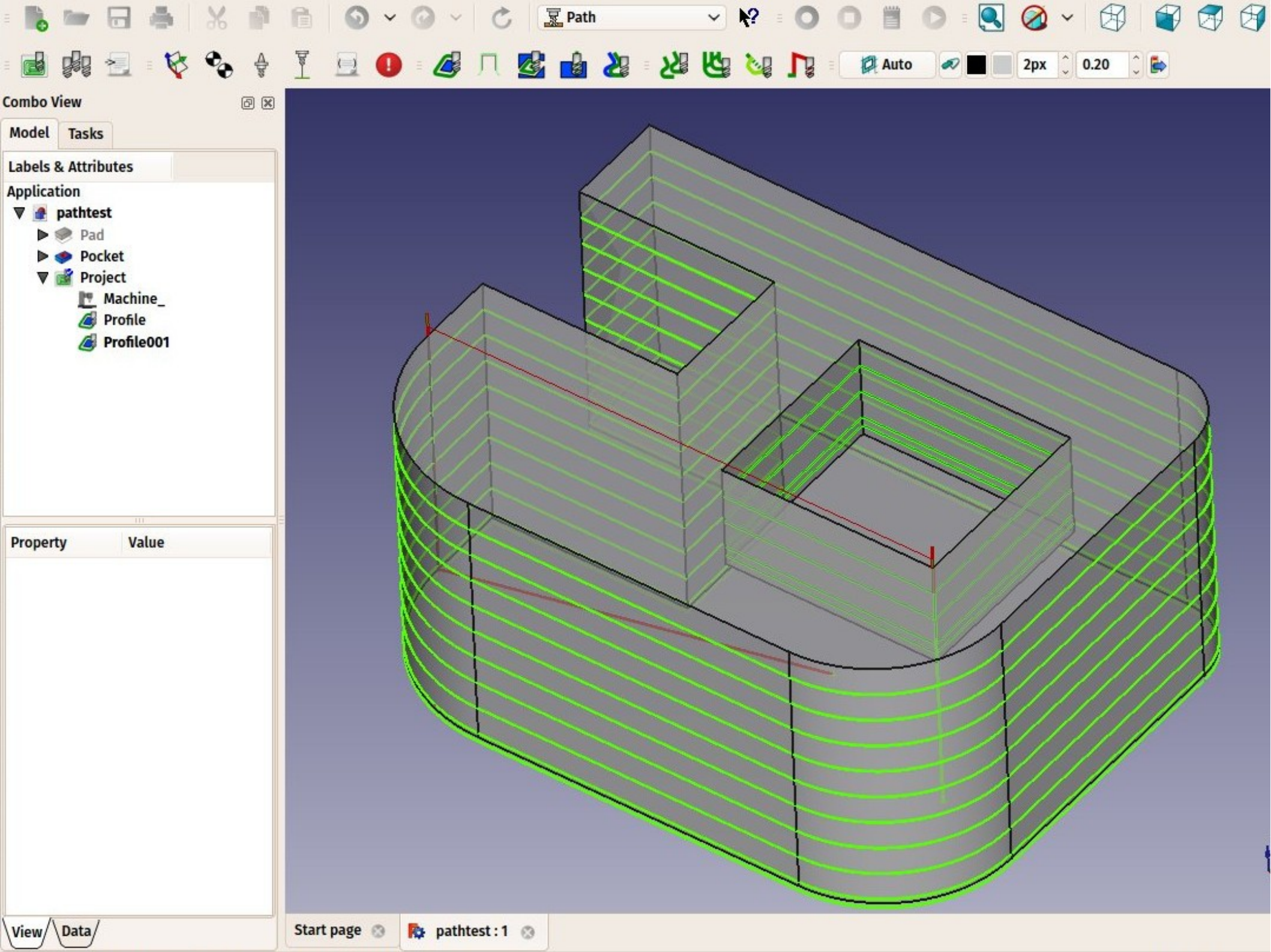
Path
Auto
2px
0.20
Combo View
Model
Tasks
Labels & Attributes
Application
pathtest
Pad
Pocket
Project
Machine_
Profile
Profile001
Property
Value
View
Data
Start page
pathtest : 1

File Edit View Tools Macro Architecture Draft Windows Help

Arch

Auto

Combo View

Model Tasks

Labels & Attributes

Application

- projeto
  - Projeto
    - Estutura
    - Alvenarias
    - Vidros
    - Escadas
    - Paisagismo
    - Coberturas leves
    - Passarela
    - Torre peixe
    - Estruturas auxiliares
  - Rodoviaria
  - Section

Property	Value
Arch	
Display Size	100 mm
Base	
Display Mode	Default

View Data

Selection view

Search

projeto.Section (Section)

projeto : 1

File Edit View Tools Macro Architecture Draft Windows Help

Arch

Auto

Combo View

Model Tasks

Labels & Attributes

Application

- projeto
  - Projeto
    - Estutura
    - Alvenarias
    - Vidros
    - Escadas
    - Paisagismo
    - Coberturas leves
    - Passarela
    - Torre peixe
    - Estruturas auxiliares
  - Rodoviaria
  - Section

Property	Value

View Data

projeto : 1

Selection view

Search

Report view

```
  Resource id:  0x0
Hide main window
Active view is projeto : 1[*] (at 0x4dbb530)
Show main window
Hide main window
Active view is projeto : 1[*] (at 0x4dbb530)
Show main window
```

Python console

```
>>> Gui.activeDocument().activeView().viewFront()
>>> Gui.activeDocument().activeView().viewRight()
>>> 3Gui.activeDocument().activeView().viewRight()
>>> Gui.activeDocument().activeView().setCameraType("Orthographi
>>>
```

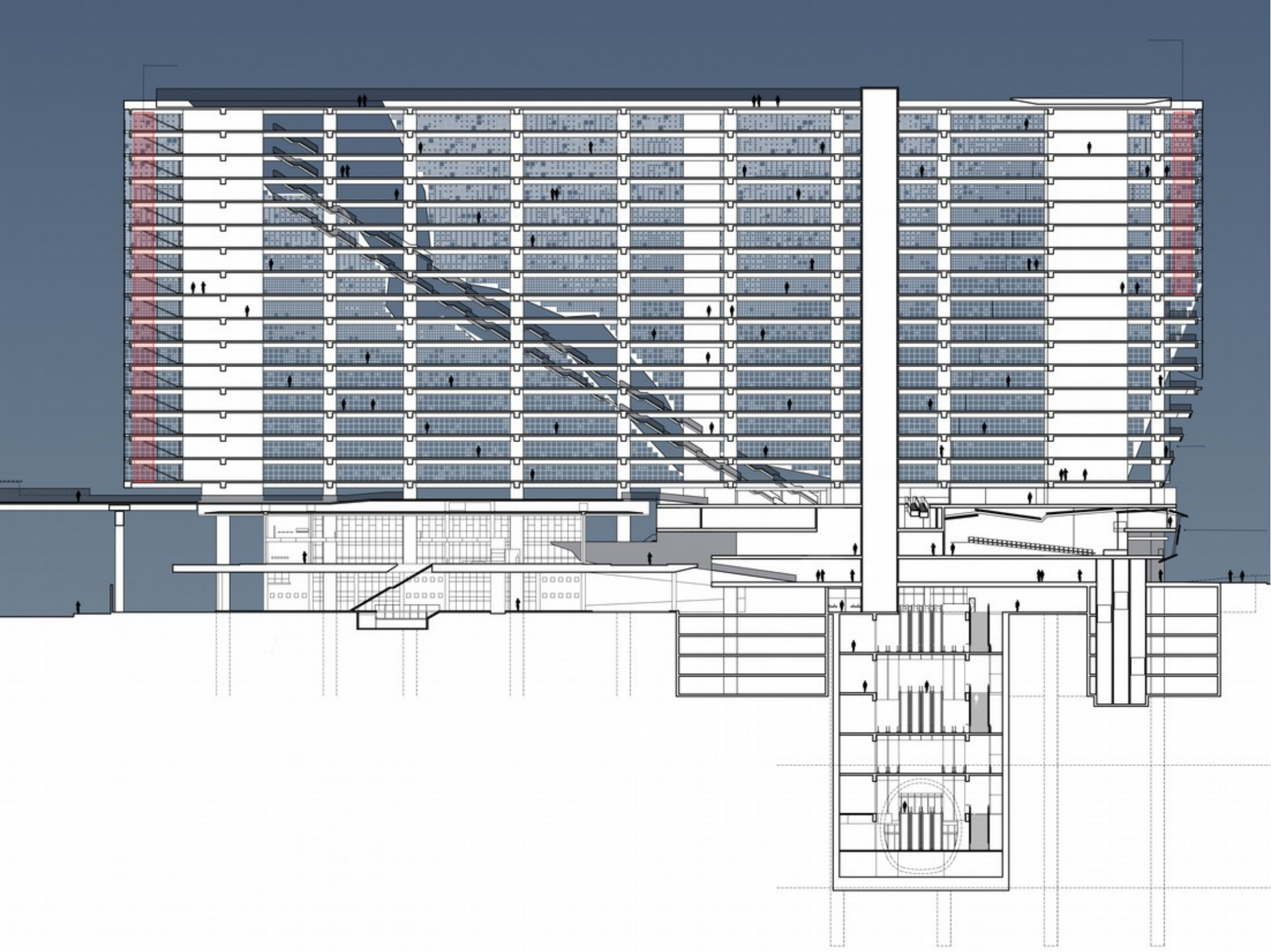

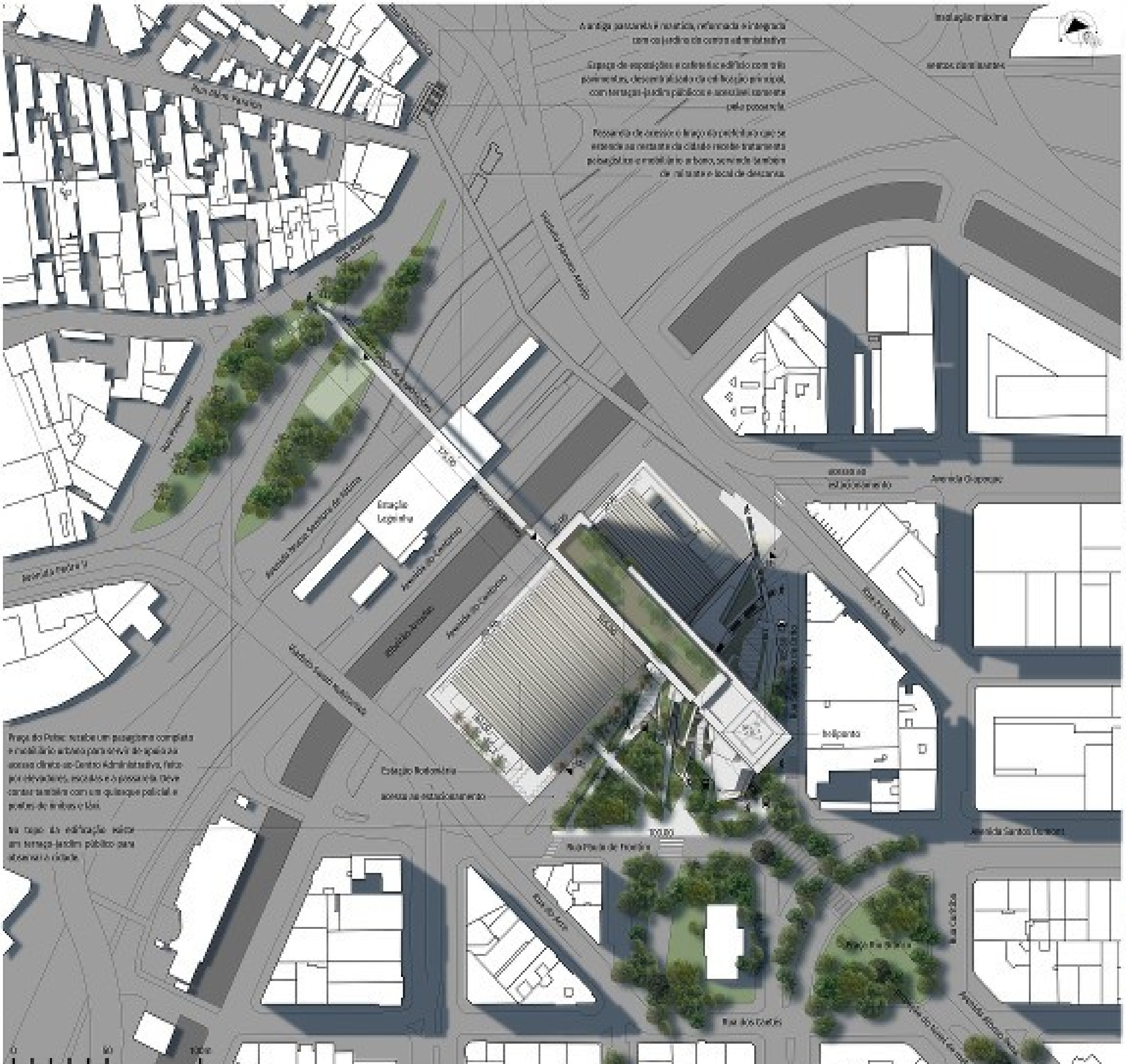

UM HÍFEN NA ESCALA DA CIDADE

A ideia norteadora dessa proposta é um projeto funcione como um grande hífen, unindo dois sistemas urbanos diferentes que até agora se mantêm desconectados devido à intensa ... viária que ocupa essa região e trama região do centro urbano e o bairro da Lagoinha. A reaproximação dessas duas partes também une simbolicamente a cidade inteira com seu centro.

Para funcionar como hífen, é necessário que projeto transborde seus limites. Ele precisa invadir o seu entorno direto até "alcançar" as partes a serem reunidas.

Essa expansão para além dos limites do terreno, esse transbordamento físico que o projeto faz na busca de conectar as partes da cidade resulta na geração de um espaço público múltiplo e complexo. Quando fisicamente o edifício engloba o terminal rodoviário, busca a Praça do Peixe com a passarela, cria o espaço de exposições na divisa, e permite que o público circule nos jardins criados pelo Centro Administrativo Municipal ele chama as pessoas a se encontrarem na praça, local também de acesso ao metrô e ao futuro terminal urbano.
É nessa confluência de caminhos, na interseção onde espaços se encontram que eles também se amplificam, criando uma sinergia de públicos e a energia vinda desses encontros. Faz com que os espaços reforcem-se entre si, fazendo crescer importância de cada um no contexto da cidade.

PRIMUM NON NOCERE

Ou, "antes de tudo, não piorar", é o primeiro princípio de bioética ensinado aos médicos, parte do Juramento de Hipócrates. Também é um dos conceitos principais que norteiam esta proposta. O local do projeto, no meio de uma alta concentração de vias e viadutos, se tornou o centro de uma vasta área degradada por operações sucessivas, cada uma aparentemente feita na tentativa de solucionar os problemas causados pelas anteriores.

Esta proposta aceita esse círculo vicioso e encara seu entorno degradado como uma situação frágil, mas funcional. Não modifica, portanto, nenhuma circulação de veículos, inclusive dentro da própria área do projeto. Apenas cria múltiplas e únicas relações pedestres com seu entorno imediato, abrindo brechas para fomentar pequenos eventos no entorno do projeto, e incentivar, como se acupuntura fosse, o público a desviar dos seus caminhos atuais e se apropriar do espaço novamente.

CONCURSO PÚBLICO NACIONAL DE PROJETOS DE ARQUITETURA PARA
O CENTRO ADMINISTRATIVO DO MUNICÍPIO DE BELO HORIZONTE

File Edit View Tools Macro Architecture Draft Windows Help

Arch

Auto

Combo View

Model Tasks

Labels & Attributes

Application

- projeto
  - Projeto
    - Estutura
    - Alvenarias
    - Vidros
    - Escadas
    - Paisagismo
    - Coberturas leves
    - Passarela
    - Torre peixe
    - Estruturas auxiliar
  - Rodoviaria
  - Section
- Sports Complex
  - ID77008 Default
    - ID104 Building
      - ID113 Level 1
      - ID123 Roof Low

Property	Value
Arch	
Display Size	100 mm
Base	
Display Mode	Default

View Data

Selection view

Search

projeto : 1 Sports Complex : 1

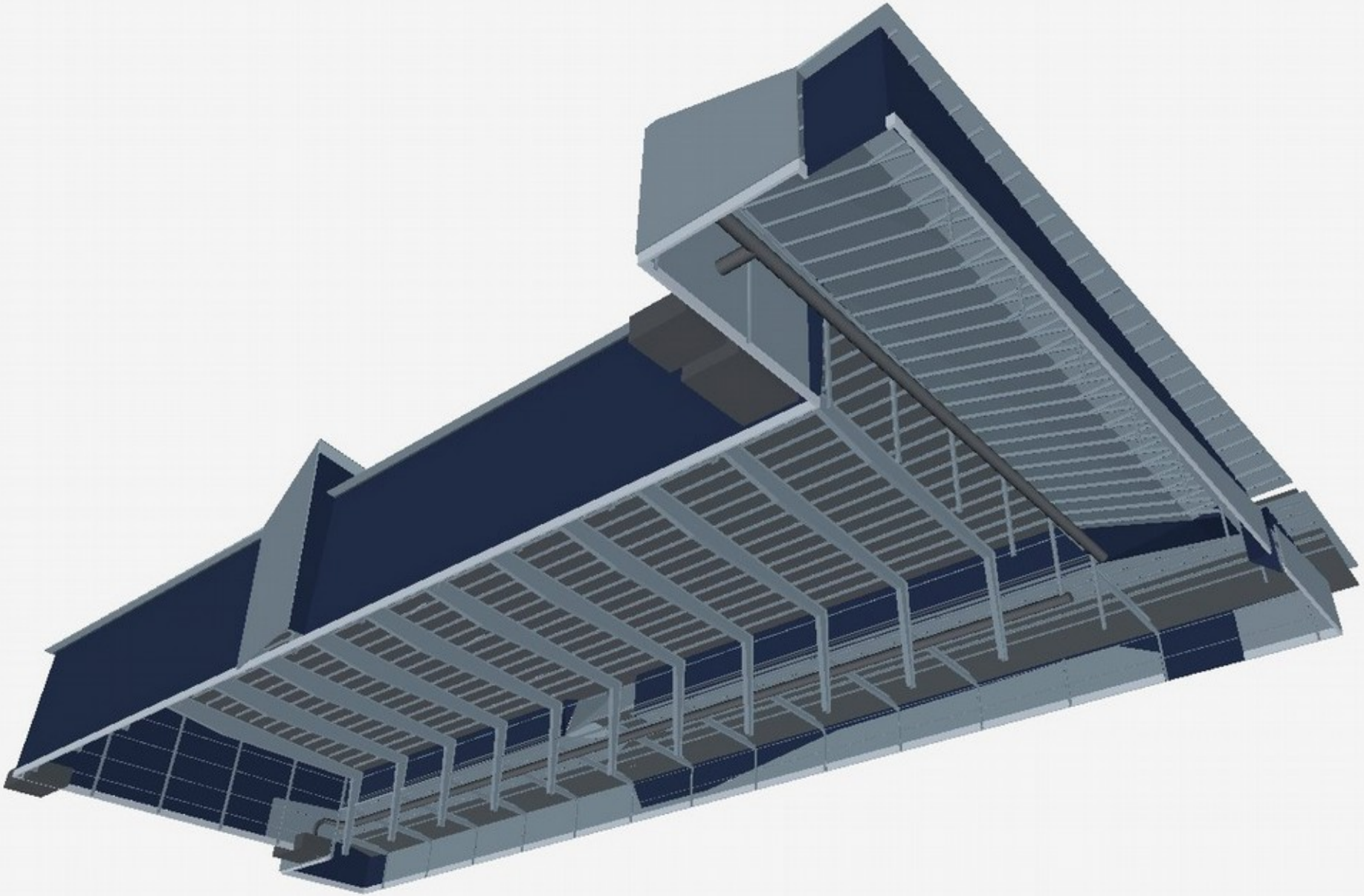

Write IFC | View

IFC file

Complex.ifc | Choose file | Load

100%

#94163=IfcFace
Warning: addClosedPolyhedron: Meshset is not closed, IFC e
#94433=IfcFace
Warning: addClosedPolyhedron: Meshset is not closed, IFC e
#146202=IfcFace
File loaded: 143082 entities in 2945.37 sec.

000, 0.000

preferences
Working with workbenches
Drafting 2D objects
Working with constraints
Working with meshes
Working with 3D parts
Using architectural objects
Printing your work in 2D
Rendering your work
Working with robots
Customizing FreeCAD
Commands Reference

Powerusers documentation
Powerusers hub
Discovering python
FreeCAD scripting basics
Working with macros
Mesh scripting
Part scripting
Accessing the 3D view
Accessing the interface
Scripted Objects
Scripting examples
Python API

Developers documentation
Developers hub
Helping FreeCAD
Compiling FreeCAD
License details
Organization chart
Startup options
Branding
Translating FreeCAD

Help & Feedback
Help forum

Tools [edit]

Construction tools [edit]

These are tools for creating architectural objects.

- Wall: Creates a wall from scratch or using a selected object as a base
- Structural element: Creates a structural element from scratch or using a selected object as a base
- Rebar: Creates a reinforcement bar in a selected structural element
- Floor: Creates a floor including selected objects
- Building: Creates a building including selected objects
- Site: Creates a site including selected objects
- Window: Creates a window using a selected object as a base
- Section Plane: Adds a section plane object to the document
- Axes system: Adds an axes system to the document
- Roof: Creates a sloped roof from a selected face
- Space: Creates a space object in the document
- Stairs: Creates a stairs object in the document
- Panel: Creates a panel object from a selected 2D object

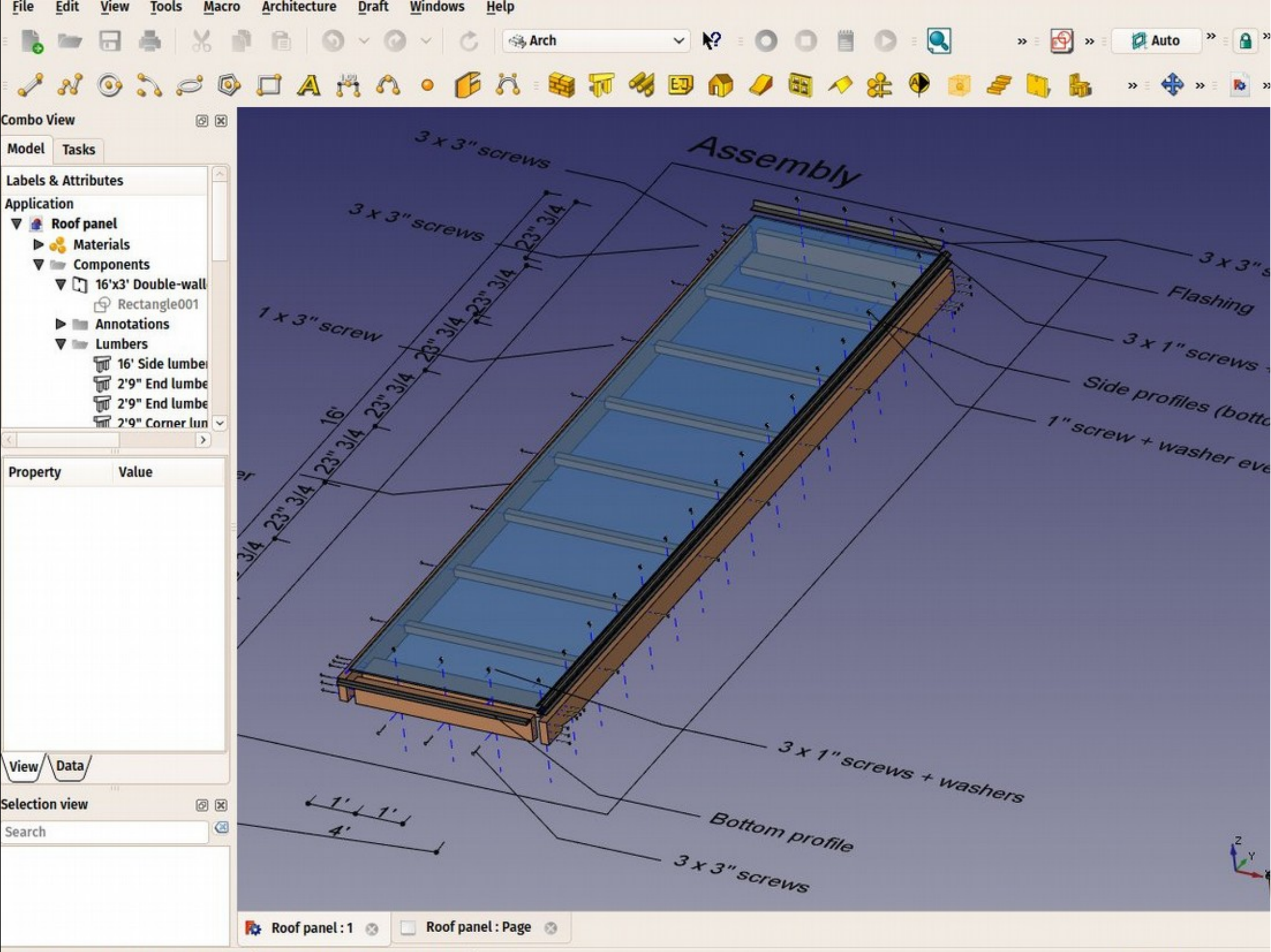
File Edit View Tools Macro Architecture Draft Windows Help
Arch
Auto
Combo View
Model
Tasks
Labels & Attributes
Application
Roof panel
Materials
Components
16'x3' Double-wall
Rectangle001
Annotations
Lumbers
16' Side lumber
2'9" End lumbe
2'9" End lumbe
2'9" Corner lun
Property
Value
View
Data
Selection view
Search
Assembly
3 x 3" screws
3 x 3" screws
1 x 3" screw
16'
23" 3/4
3 x 3"
Flashing
3 x 1" screws
Side profiles (botto
1" screw + washer eve
3 x 1" screws + washers
Bottom profile
3 x 3" screws
1'
1'
4'
Roof panel : 1
Roof panel : Page

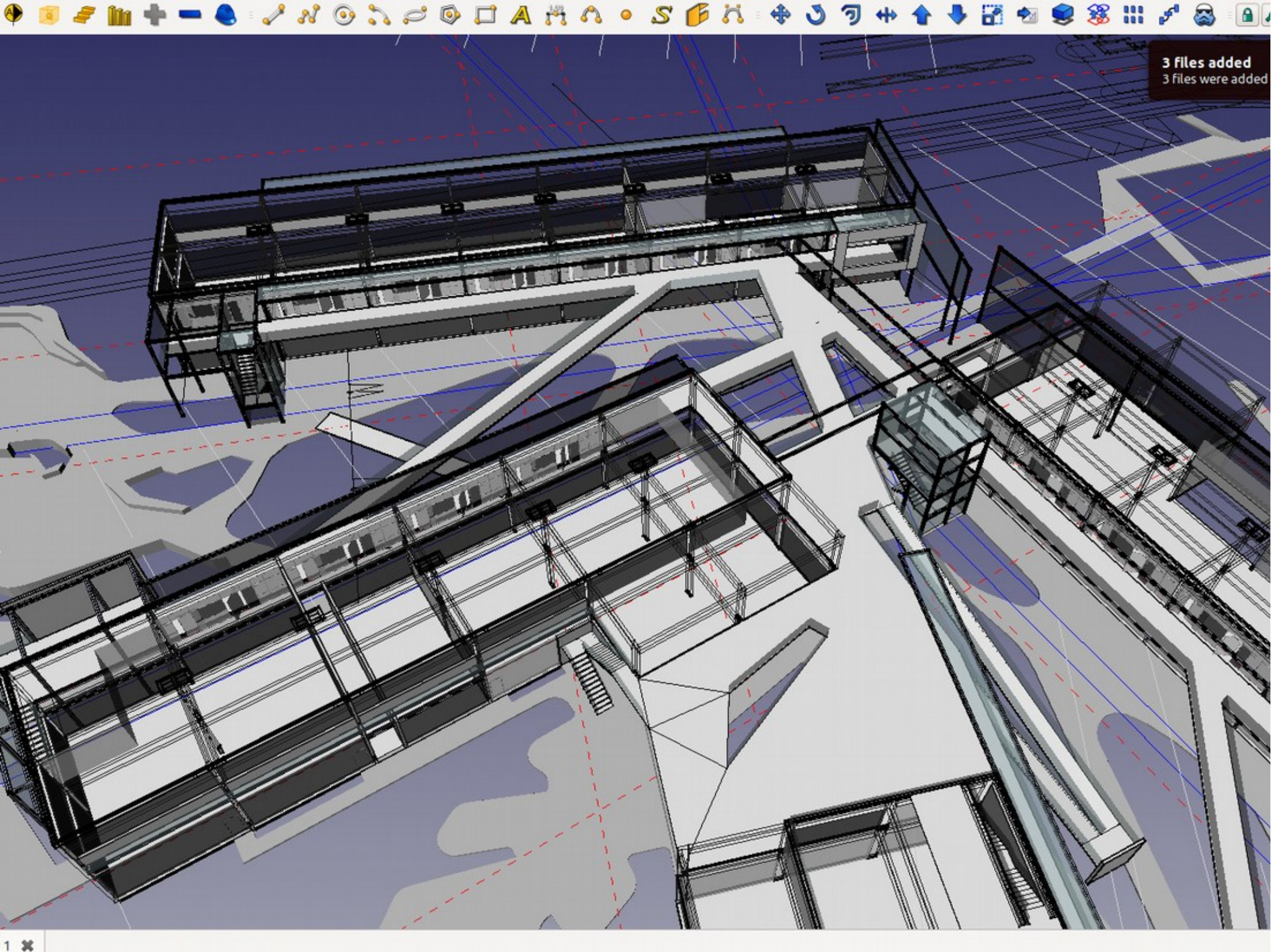
3 files added
3 files were added

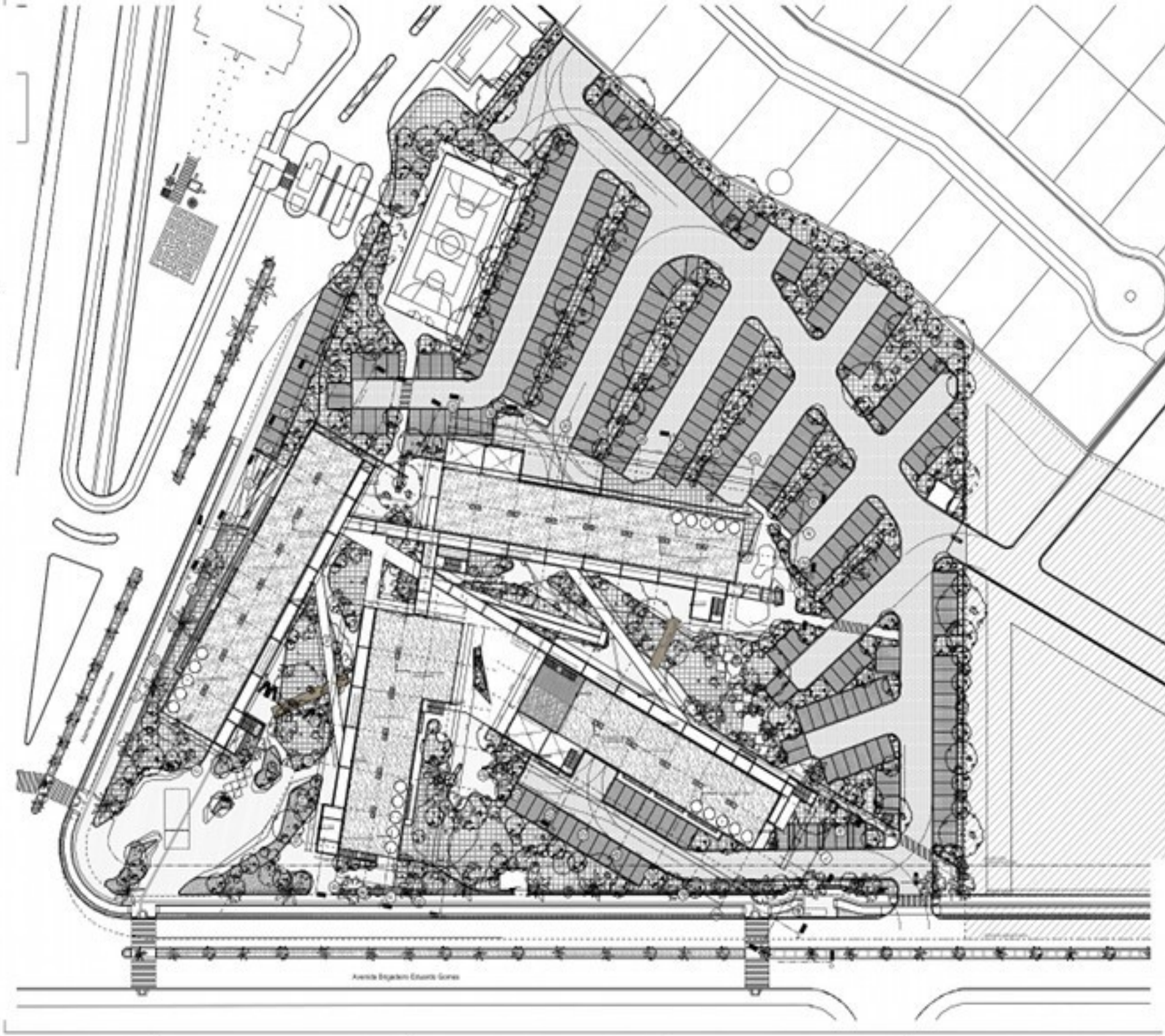

COSTA DO IPÊ - PARQUE SHOPPING

PLANTA COBERTURA 03 / 14

1 : 250

21.11.2012 revisão 0

CORTE EE - ELEVAÇÃO FUNDOS

CORTE GG - ELEVAÇÃO AVENIDA BRIGADEIRO EDUARDO GOMES

CORTE BB - PERFIL ALAMEDA DOS GUARIROBAS

CORTE MM - PERFIL AVENIDA BRIGADEIRO EDUARDO GOMES

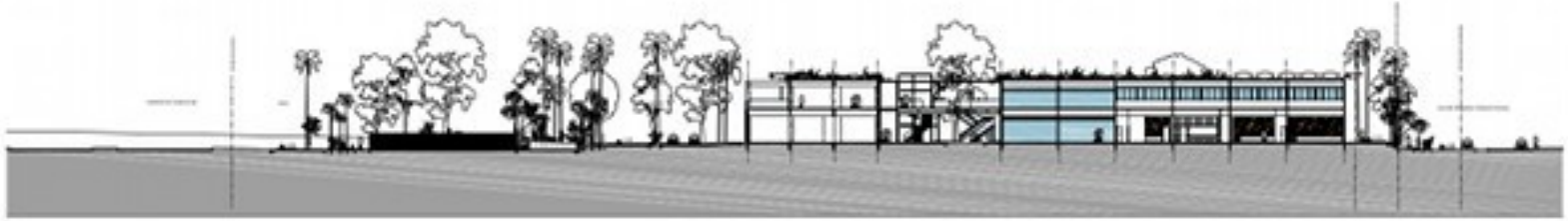

CORTE LL - NORTE - SUL

CORTE FF - PERFIL VIA DE ACESSO AO ESTACIONAMENTO

CORTE BB - LESTE - OESTE

CORTE HH - ELEVAÇÃO ALAMEDA DOS GUARIROBAS

COSTA DO IPÊ - PARQUE SHOPPING

AVENIDA BRIGADEIRO EDUARDO GOMES, 3001 - MANILA - Nº 170-1408

ARQUITETURA - PROJETO BÁSICO

CORTES GERAIS 06 / 14

1 : 250

21.11.2012 revisão 0

Arquitetura: ARCHITECTS NET - Maria Rosana Zanin - Tomás Leal Neves - Eduardo Pinto
info@architects.net (11) 3214-5230 (11) 99987-5230 http://www.architects.net
Projetos Lab & Bim: Silvio Lucato - Neto Tomaselli
info@lab-bim.com (14) 3412-1408 http://www.lab-bim.com

L'IFC:

- Ouvert: Pas de brevet, pas de propriétaire, pas de copyright
- Très bien documenté
- Lisible par un être humain
- Pensé pour représenter un bâtiment

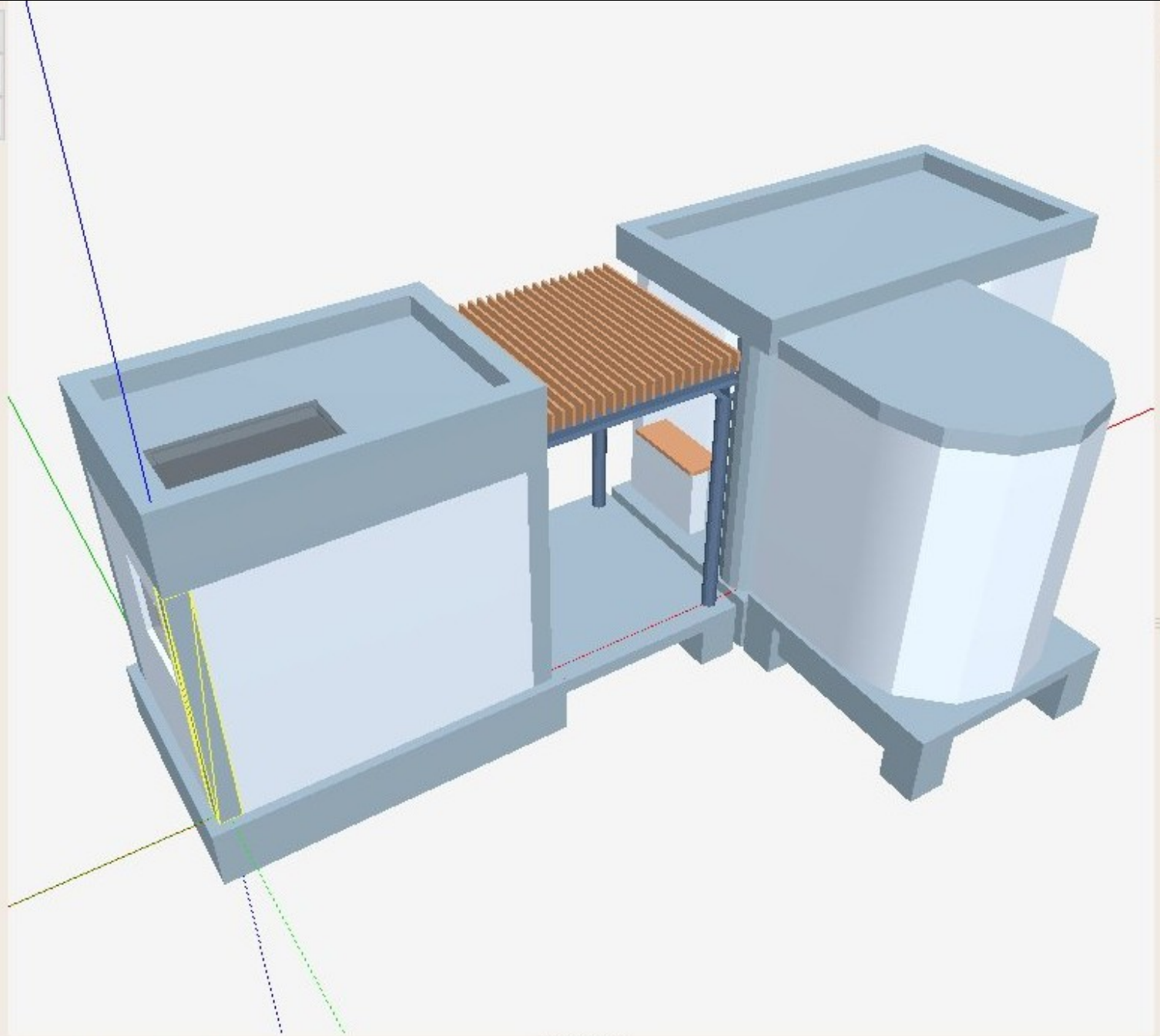

Project structure

Label	Object id	Class name
Testhouse	20	IfcProject
Site	21	IfcSite
Testhouse 2	22	IfcBuilding
Ground floor	23	IfcBuilding.
Column 1	49	IfcColumn
Column 2	71	IfcColumn
Column 3	93	IfcColumn
Column 4	115	IfcColumn
Beam Long 1	137	IfcBeam
Beam Long 2	159	IfcBeam
Beam Short 1	181	IfcBeam
Beam Short 2	203	IfcBeam
Column Extension 1	222	IfcColumn
Column Extension 2	241	IfcColumn
Metal column 1	264	IfcColumn
Metal column 2	283	IfcColumn
Metal beam 3	313	IfcBeam
Metal beam 2	401	IfcBeam
Metal beam 1	485	IfcBeam
Wall Short 1	511	IfcWall
Small Window	787	IfcWindow
Wall Long 1	809	IfcWall
Wall Short 2	831	IfcWall
Main Door	1018	IfcDoor
Wall Long 2	1040	IfcWall
Extension Wall	1179	IfcWall
Extension door	1451	IfcDoor
Bar wall	1473	IfcWall
Annex front wall	1495	IfcWall
Annex door	1682	IfcDoor
Annex curved wall	1739	IfcWall
Brises	2651	IfcBuilding.
Bar table	2812	IfcBuilding.
Main room	2901	IfcSpace
Annex room	3053	IfcSpace
Sightseeing space	3178	IfcSpace
Terrace	3356	IfcSpace
Foundation	3357	IfcBuilding.
Roof	3776	IfcBuilding.

Read/Write IFC | View

Read IFC file

testhouse.ifc | Choose file | Load

Detected IFC version:
FILE_SCHEMA(('IFC2X3'))
File loaded: 5214 entities in 405.79 sec.

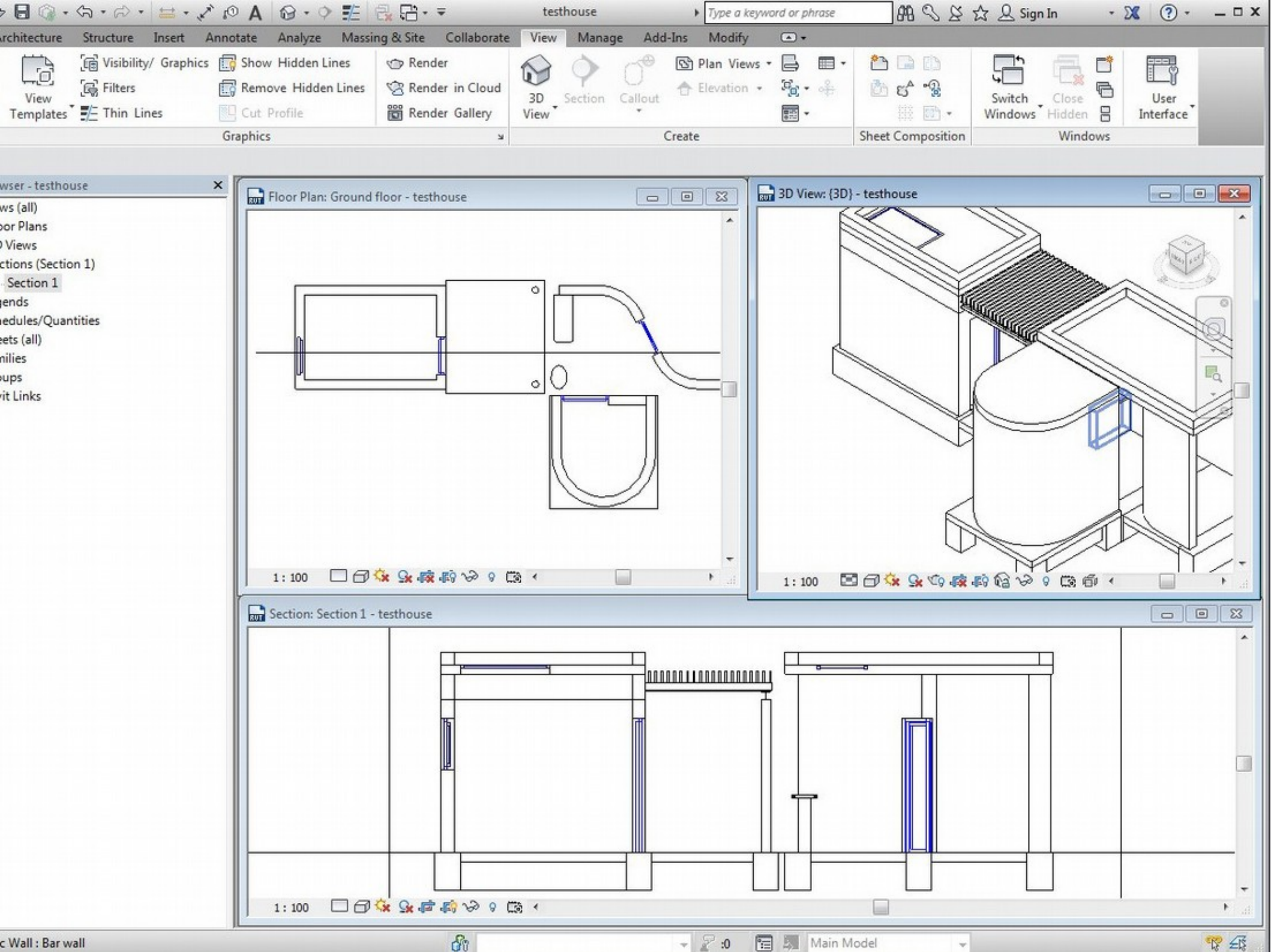
testhouse
Type a keyword or phrase
Sign In
Architecture
Structure
Insert
Annotate
Analyze
Massing & Site
Collaborate
View
Manage
Add-Ins
Modify
View Templates
Visibility/ Graphics
Filters
Thin Lines
Show Hidden Lines
Remove Hidden Lines
Cut Profile
Render
Render in Cloud
Render Gallery
Graphics
3D View
Section
Callout
Plan Views
Elevation
Create
Sheet Composition
Switch Windows
Close Hidden
Windows
User Interface
wser - testhouse
ws (all)
oor Plans
Views
ctions (Section 1)
Section 1
gends
edules/Quantities
eets (all)
milies
oups
it Links
Floor Plan: Ground floor - testhouse
1 : 100
3D View: {3D} - testhouse
1 : 100
Section: Section 1 - testhouse
1 : 100
c Wall : Bar wall
:0
Main Model

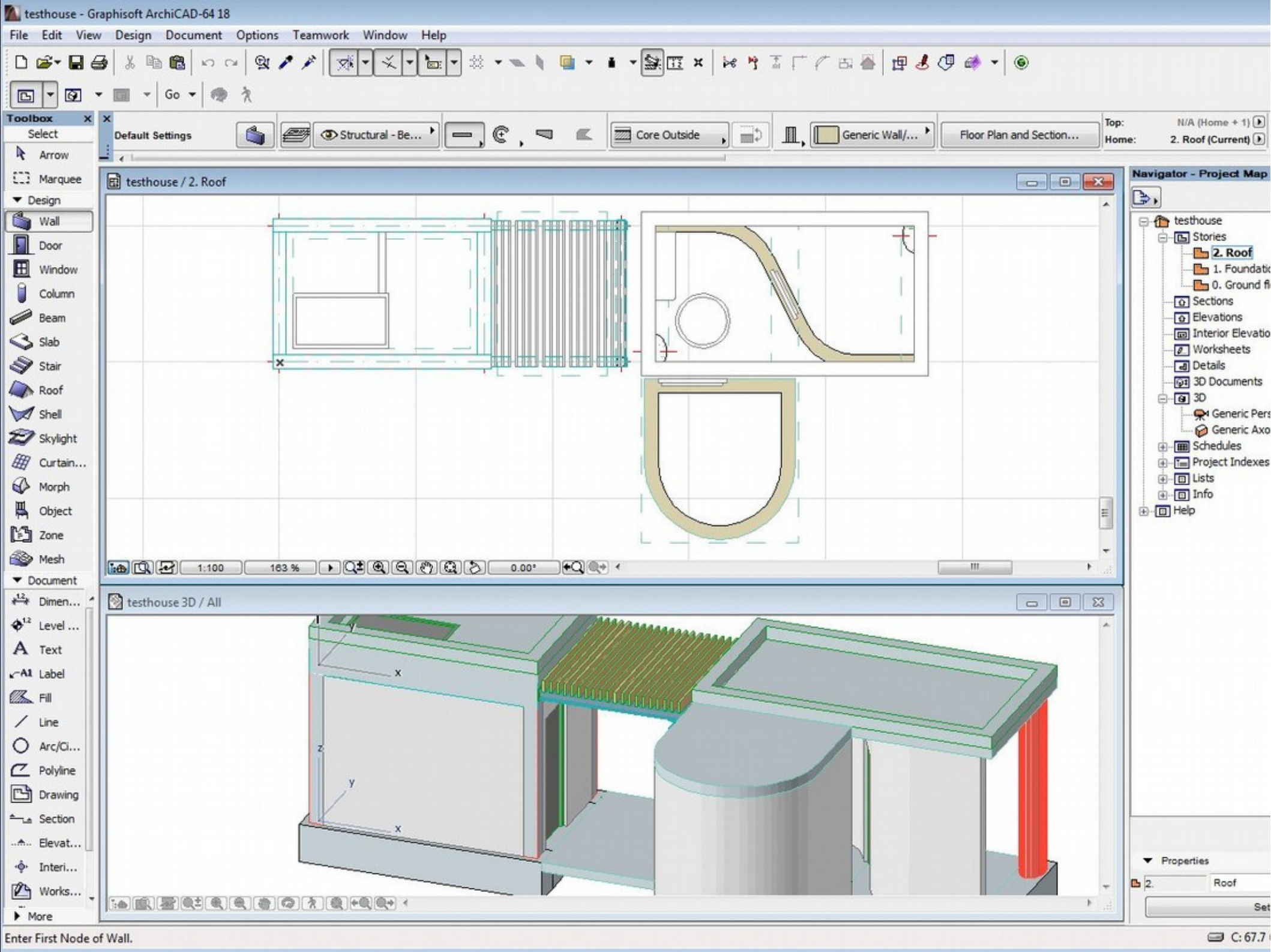
testhouse - Graphisoft ArchiCAD-64 18
File Edit View Design Document Options Teamwork Window Help
Go
Toolbox
Select
Arrow
Marquee
Design
Wall
Door
Window
Column
Beam
Slab
Stair
Roof
Shell
Skylight
Curtain...
Morph
Object
Zone
Mesh
Document
Dimen...
Level ...
Text
Label
Fill
Line
Arc/Ci...
Polyline
Drawing
Section
Elevat...
Interi...
Works...
More
Default Settings
Structural - Be...
Core Outside
Generic Wall/...
Floor Plan and Section...
Top: N/A (Home + 1)
Home: 2. Roof (Current)
testhouse / 2. Roof
1:100
163 %
0.00°
testhouse 3D / All
Navigator - Project Map
testhouse
Stories
2. Roof
1. Foundatio
0. Ground fl
Sections
Elevations
Interior Elevatio
Worksheets
Details
3D Documents
3D
Generic Pers
Generic Axo
Schedules
Project Indexes
Lists
Info
Help
Properties
2.
Roof
Enter First Node of Wall.
C: 67.7

Structure d'un fichier IFC:

#01 : Site
#02 : Bâtiment
#03 : Relation: #02 contenu dans #01
#04 : Polyline
#05 : Extrusion de #04
#06 : Mur dont la forme 3D est #05
#07 : Relation : #06 contenu dans #02
...

Parameteric Representation using parameters at IfcWindowType

The parameters, which define the shape of the **IfcWindow**, are given at the IfcWindowType and the property sets, which are included in the IfcWindowType. The **IfcWindow** only defines the local placement. The overall size of the **IfcWindow** to be used to apply the lining or panel parameter provided by the IfcWindowType is determined by the IfcShapeRepresentation with the RepresentationIdentifier = 'Profile'. Only in case of an **IfcWindow** inserted into an IfcOpeningElement using the IfcRelFillsElement relatioship, having a horizontal extrusion (along the y-axis of the IfcDoor), the overall size is determined by the extrusion profile of the IfcOpeningElement.

EXAMPLE Inserting the *IfcWindowType.PartitioningType* = DoublePanelHorizontal

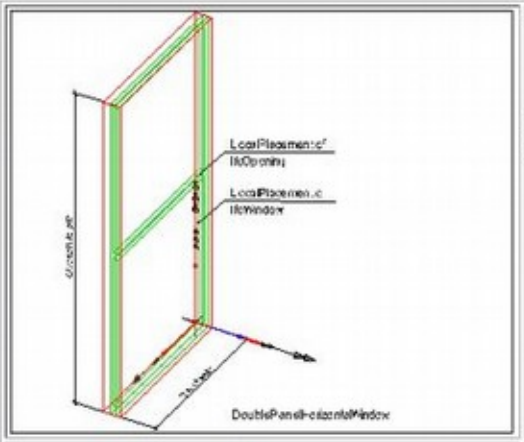

The insertion of the window type into the IfcOpeningElement by creating an instance of **IfcWindow**. The parameter:

- *OverallHeigth*
- *OverallWidth*

show the extend of the window in the positive Z and X axis of the local placement of the window. The lining and the transom are created by the given parameters.

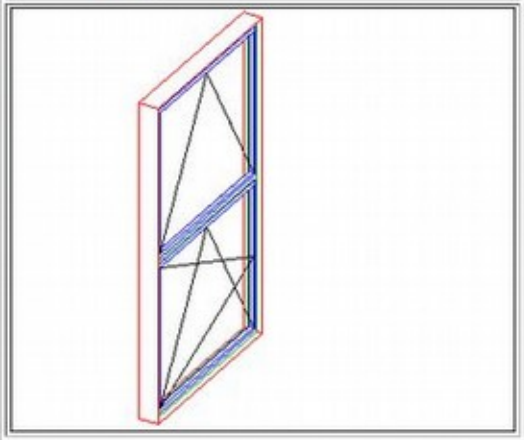

The final window (DoublePanelHorizontal) with

- first panel
  PanelPosition = TOP
  OperationType = BOTTOMHUNG
- second panel
  PanelPosition = BOTTOM
  OperationType = TILTANDTURNLEFTHAND

Window opening operation by window type

The parameters that defines the shape of the **IfcWindow**, are given at the IfcWindowType and the property sets, which are included in the IfcWindowType. The **IfcWindow** only defines the local placement which determines the opening direction of the window. The overall layout of the **IfcWindow** is determined by its *IfcWindowType.PartitioningType*. Each window panel has its own operation type, provided by *IfcWindowPanelProperties.OperationType*. All window panels are assumed to open into the same direction (if relevant for the particular window panel operation. The hindge side (whether a window opens to the left or to the right) is determined by the IfcWindowPanelProperties.*OperationType*.

Note There are different conventions in different countries on how to show the symbolic presentation of the window panel operation (the "triangles"). Either as seen from the exterior, or from the interior side. The following figures show the symbolics from the exterior side (the convention as used predominately in Europe).

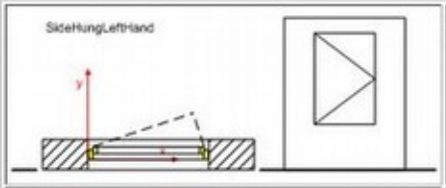

The window panel (for side hung windows) opens always into the direction of the positive Y axis of the local placement. The determination of whether the window opens to the left or to the right is done at *IfcWindowPanelProperties.OperationType*. Here it is a left side opening window given by *OperationType* = SideHungLeftHand.

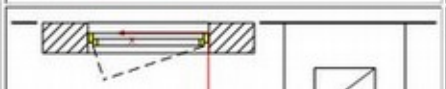

If the window should open to the other side, then the local placement has to be changed. It is still a left hung window, given by *IfcWindowPanelProperties.OperationType* = SideHungLeftHand.

Importance du contrôle:

- Contrôle du contenu du fichier
- Structure et nomenclature
- Erreurs de modélisation
- Versions

- FreeCAD: http://www.blender.org
- Blender: http://www.freecadweb.org
- Mon site: http://yorik.uncreated.net
- Compte twitter: @yorikvanhavre